0199

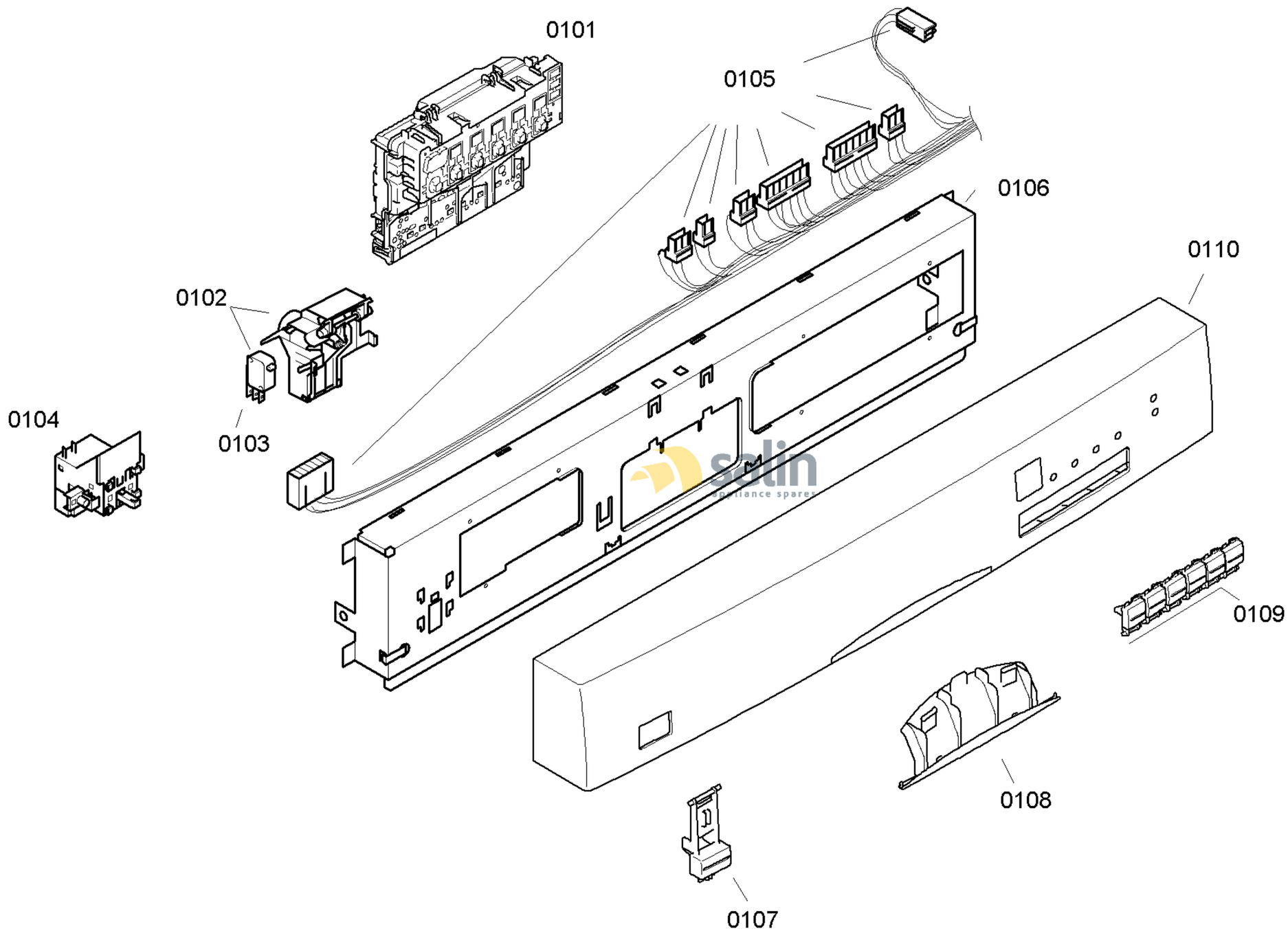


58300000130447 aet 000 a 1/6

FAMILY : SGS45M52II
MODEL NO: SGS45M52II/86
Check Position No/Part No or Replacement No

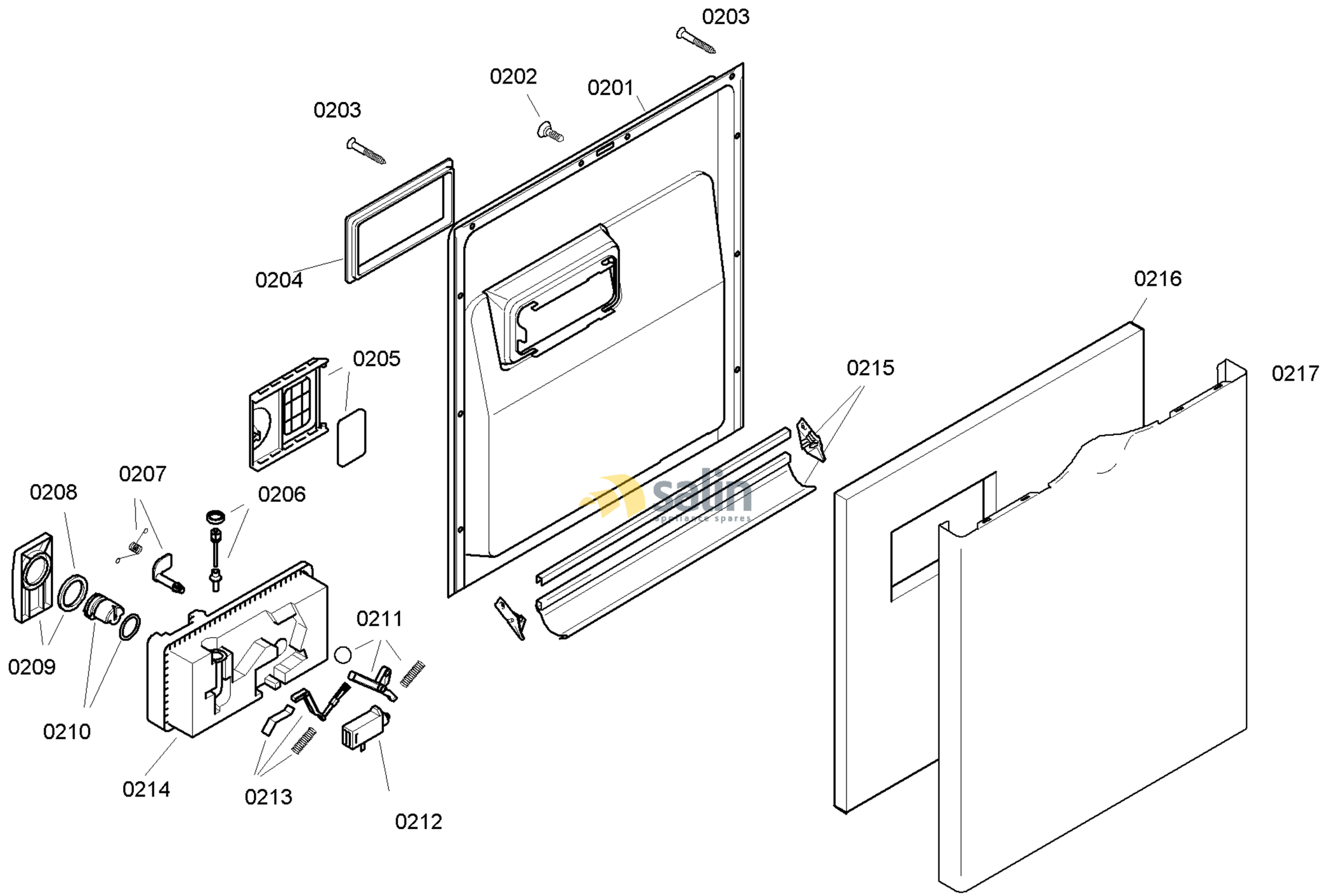


58300000130447 aet 000 a 2/6

FAMILY : SGS45M52II
MODEL NO: SGS45M52II/86
Check Position No/Part No or Replacement No

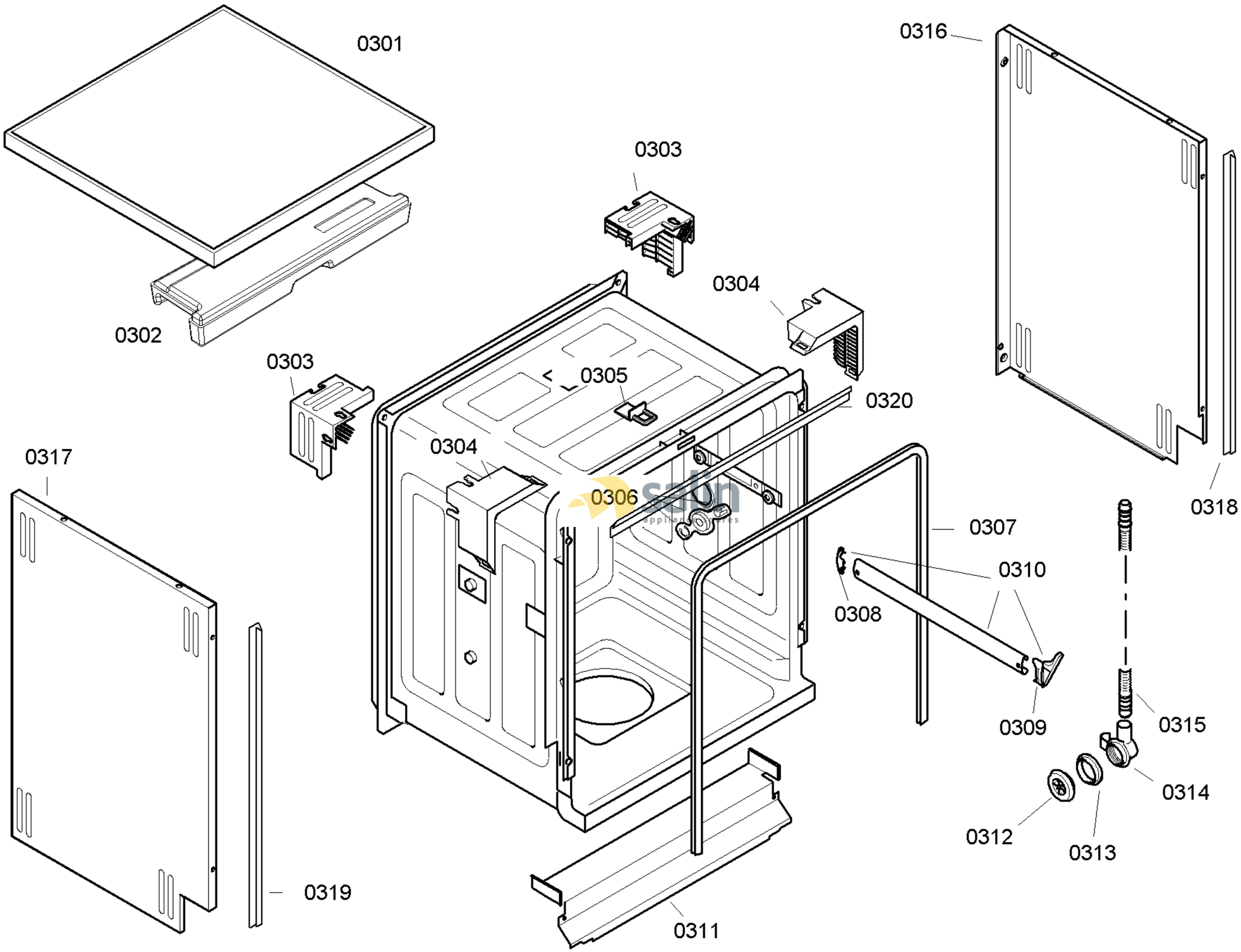


58300000130447 aet 000 a 3/6

FAMILY : SGS45M52II
MODEL NO: SGS45M52II/86
Check Position No/Part No or Replacement No

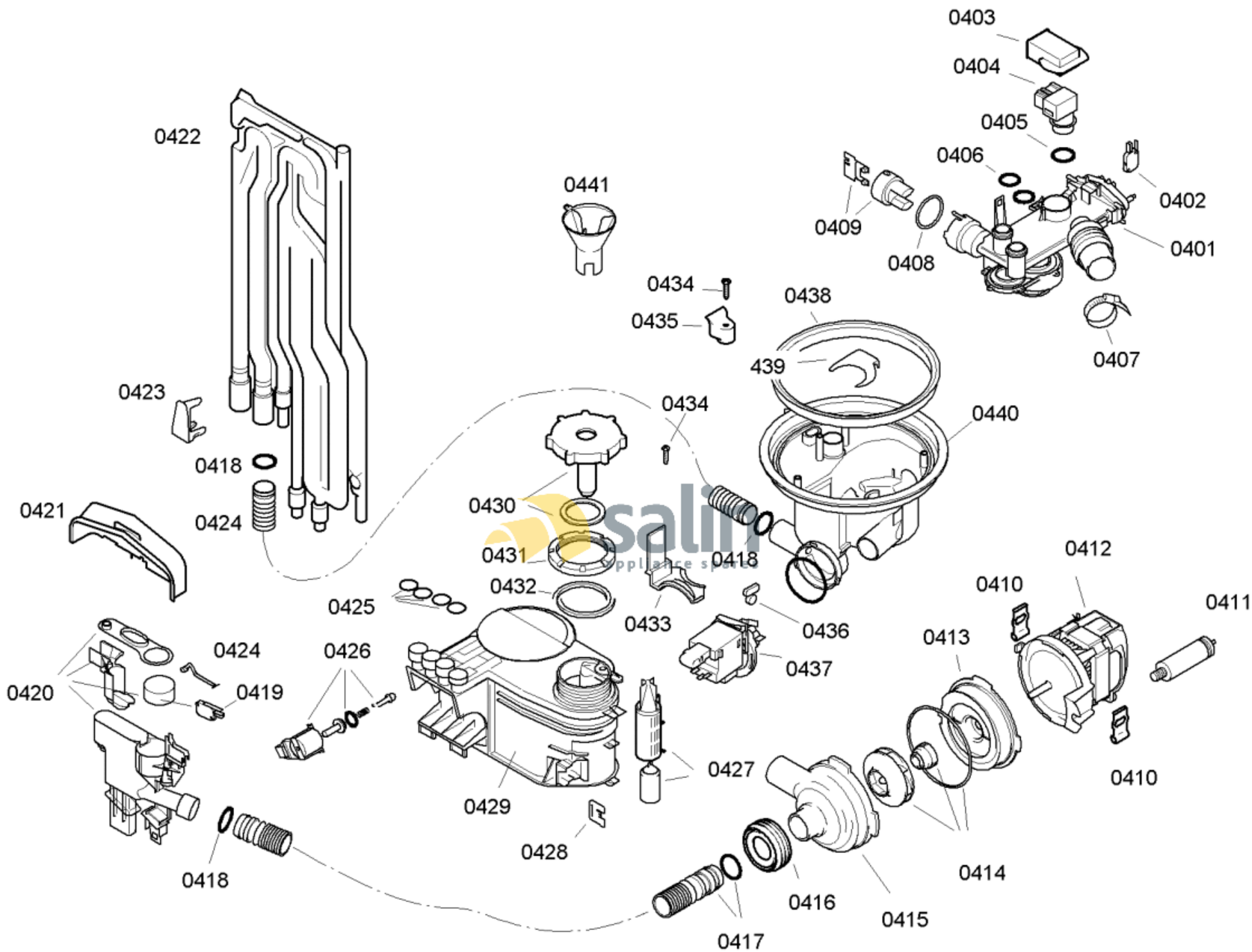


58300000130447 aet 000 a 4/6

FAMILY : SGS45M52II

MODEL NO: SGS45M52II/86

Check Position No/Part No or Replacement No

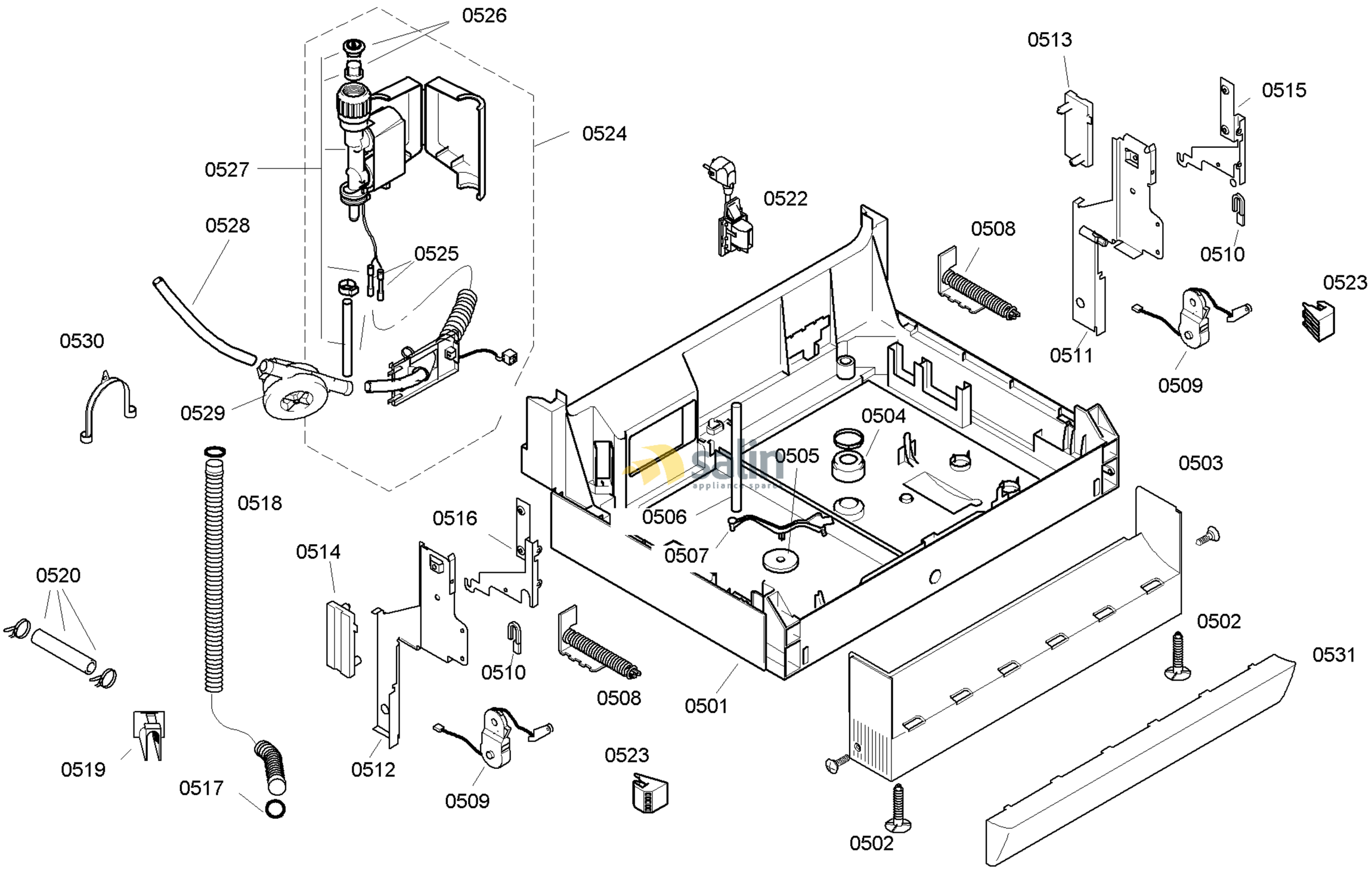


58300000130447 aet 000 a 5/6

FAMILY : SGS45M52II
MODEL NO: SGS45M52II/86
Check Position No/Part No or Replacement No

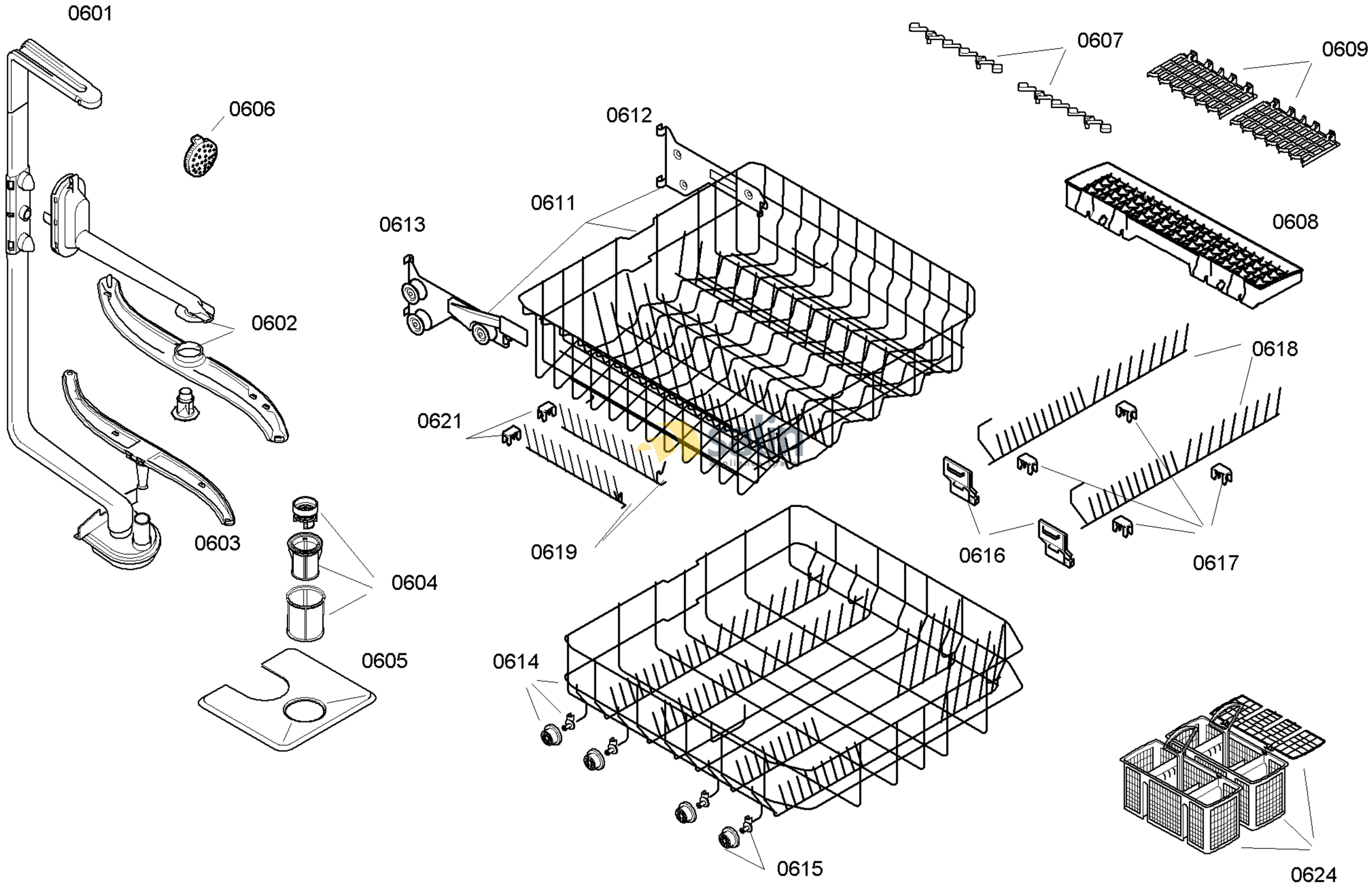


58300000130447 aet 000 a 6/6

FAMILY : SGS45M52II
MODEL NO: SGS45M52II/86
Check Position No/Part No or Replacement No