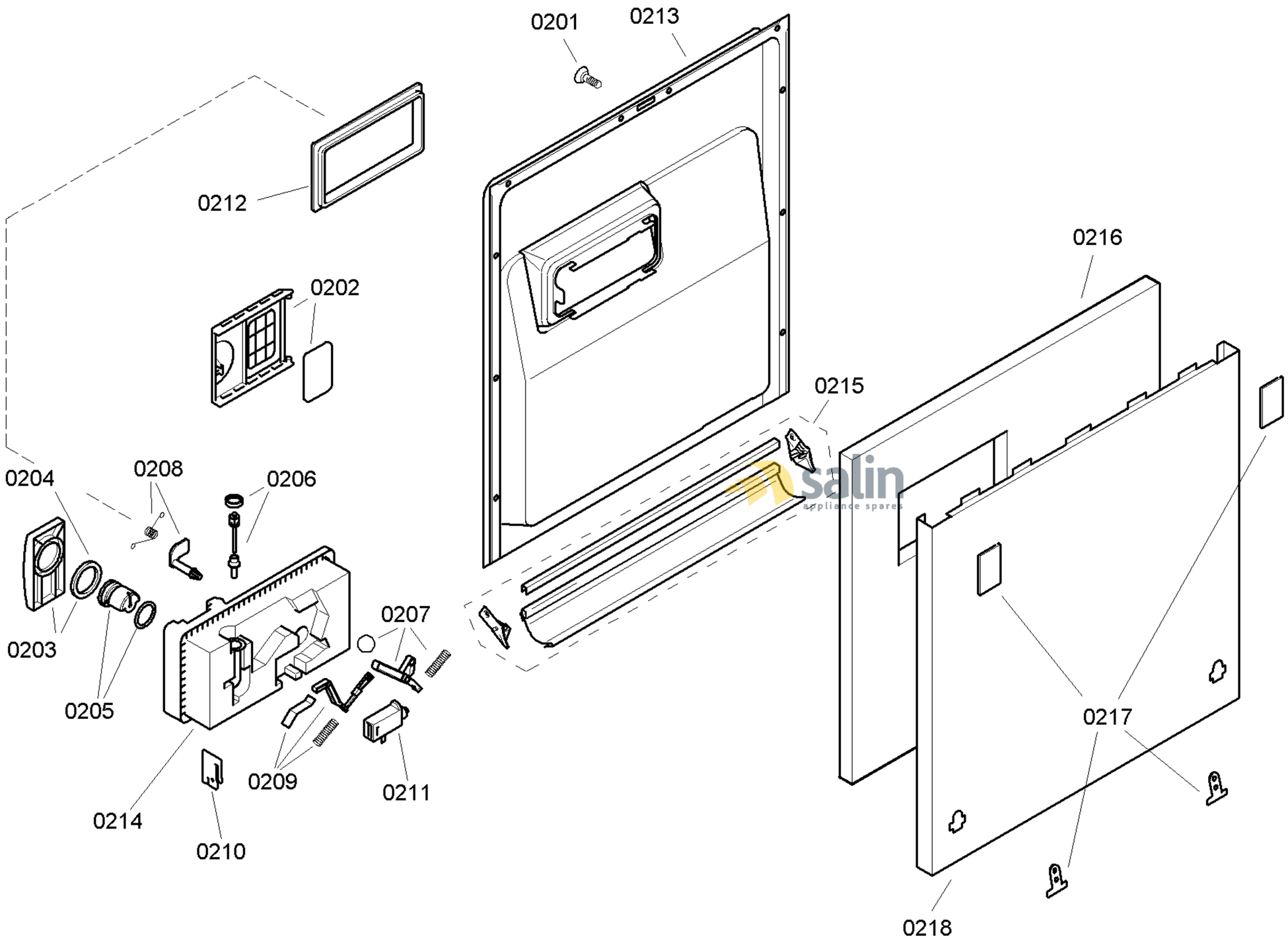

58300000122796 aet 000 c 2/6

FAMILY : SGI53E64EU
MODEL NO: SGI53E64EU/26
Check Position No/Part No or Replacement No

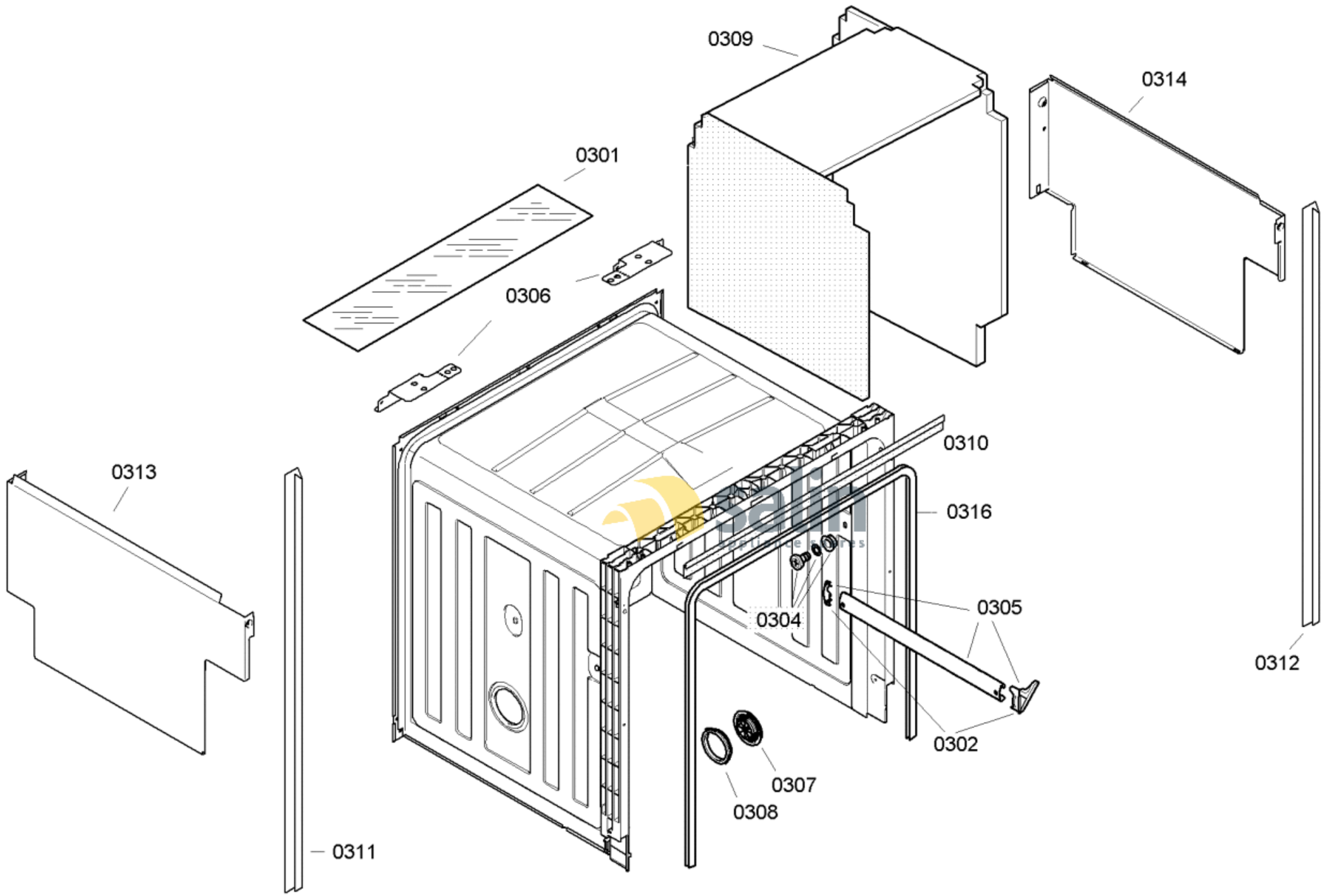

58300000122796 aet 000 c 3/6

FAMILY : SGI53E64EU

MODEL NO: SGI53E64EU/26

Check Position No/Part No or Replacement No

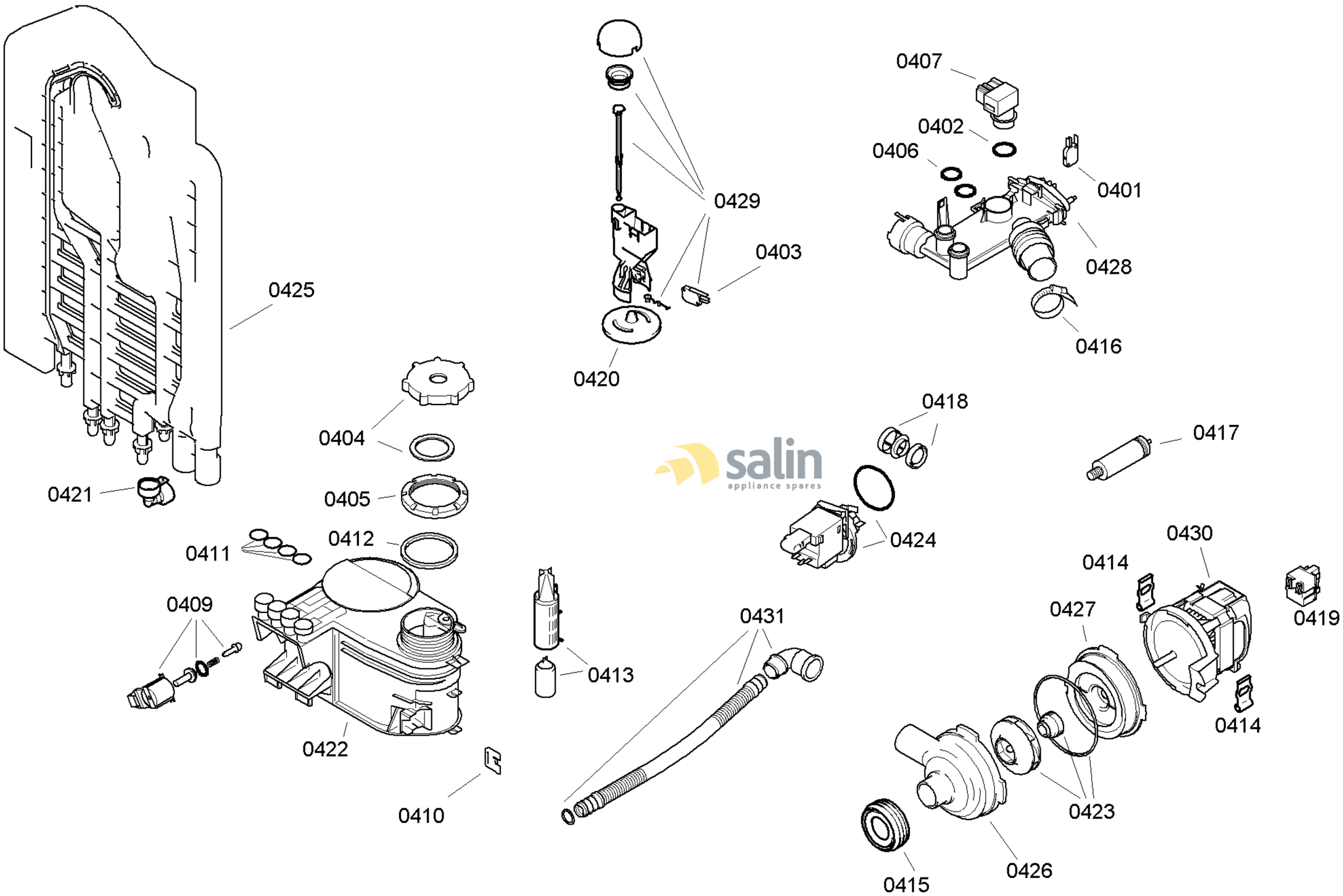

58300000122796 aet 000 c 4/6

FAMILY : SGI53E64EU
MODEL NO: SGI53E64EU/26
Check Position No/Part No or Replacement No

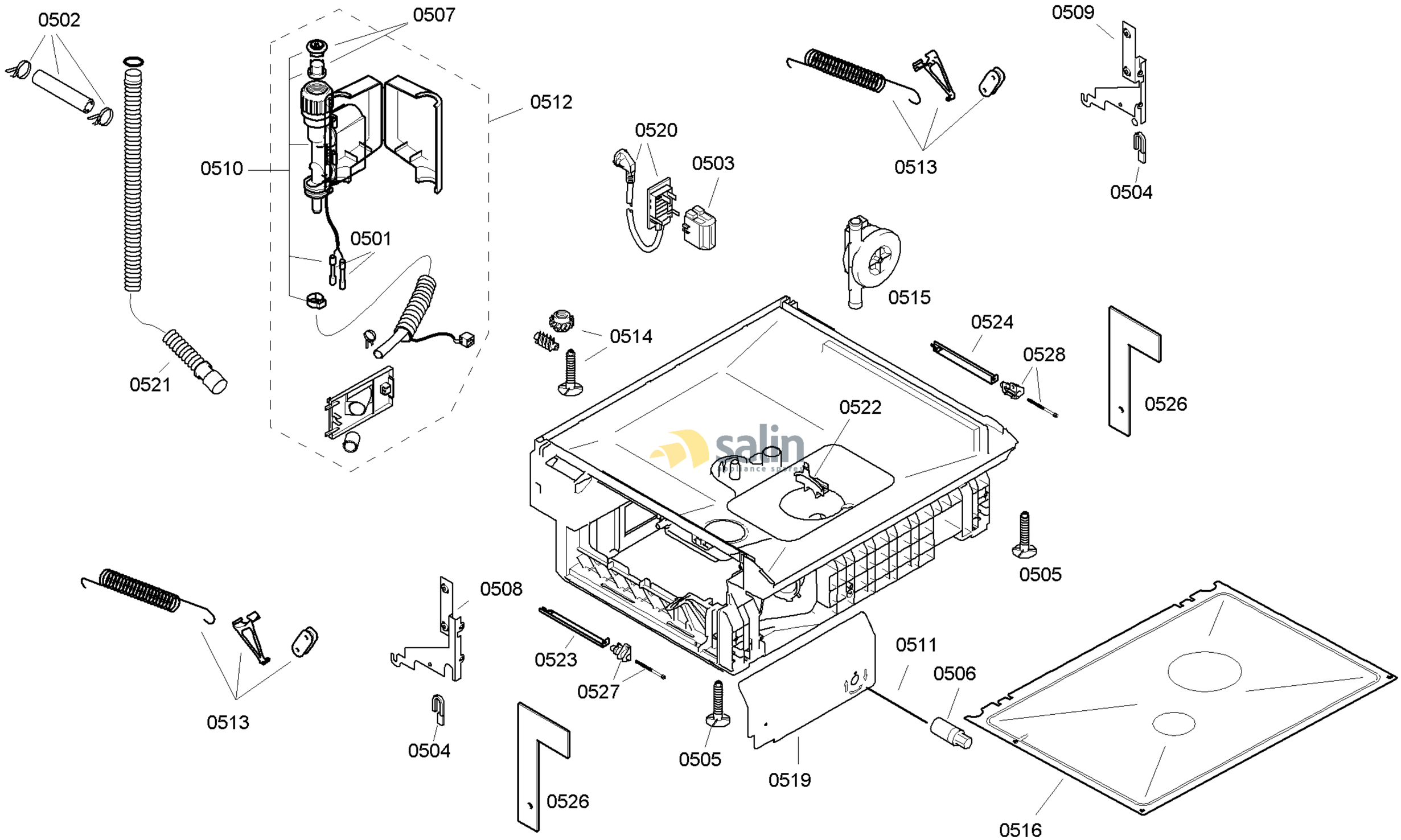

58300000122796 aet 000 c 5/6

FAMILY : SGI53E64EU
MODEL NO: SGI53E64EU/26
Check Position No/Part No or Replacement No

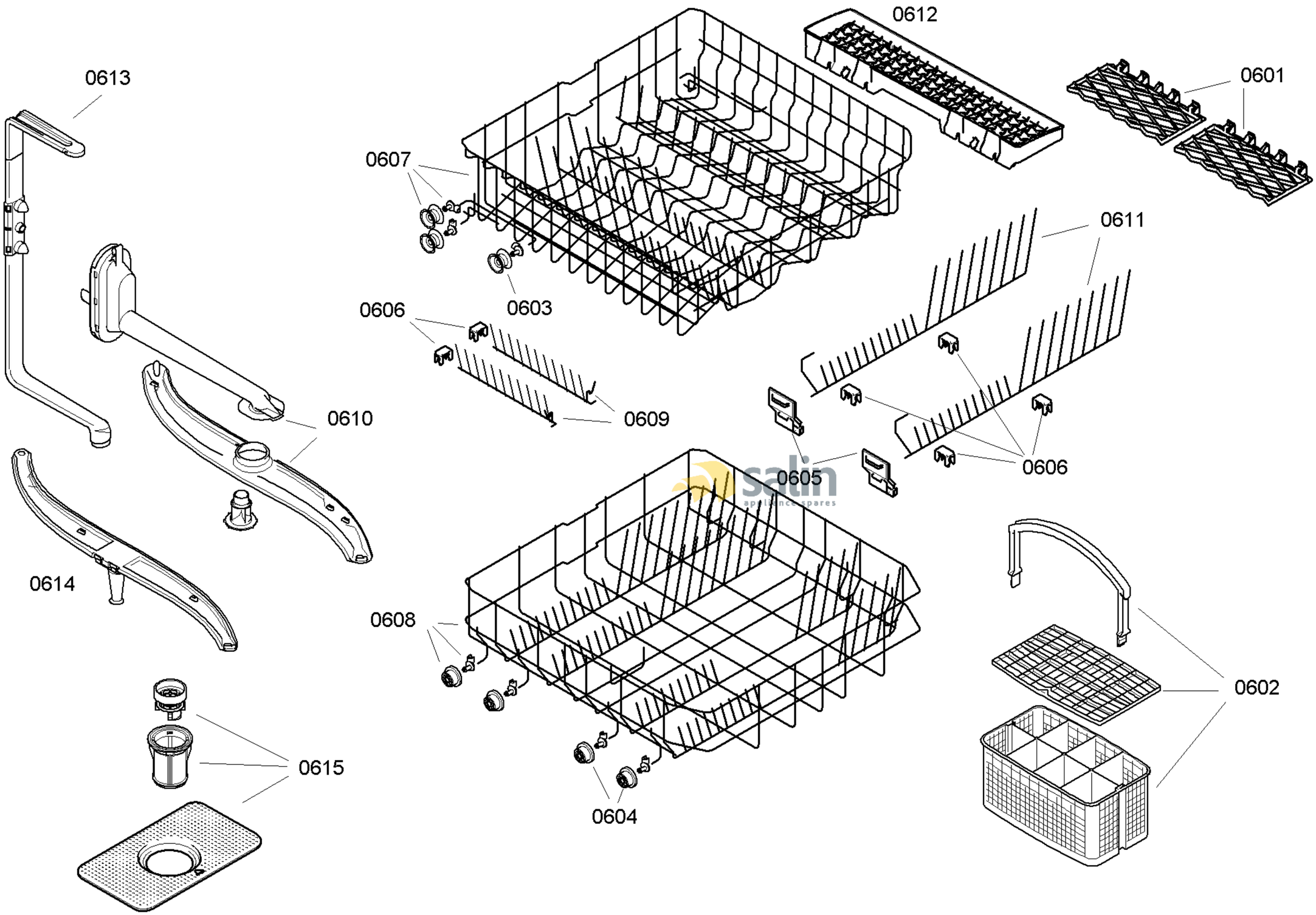

58300000122796 aet 000 c 6/6

FAMILY : SGI53E64EU
MODEL NO: SGI53E64EU/26
Check Position No/Part No or Replacement No