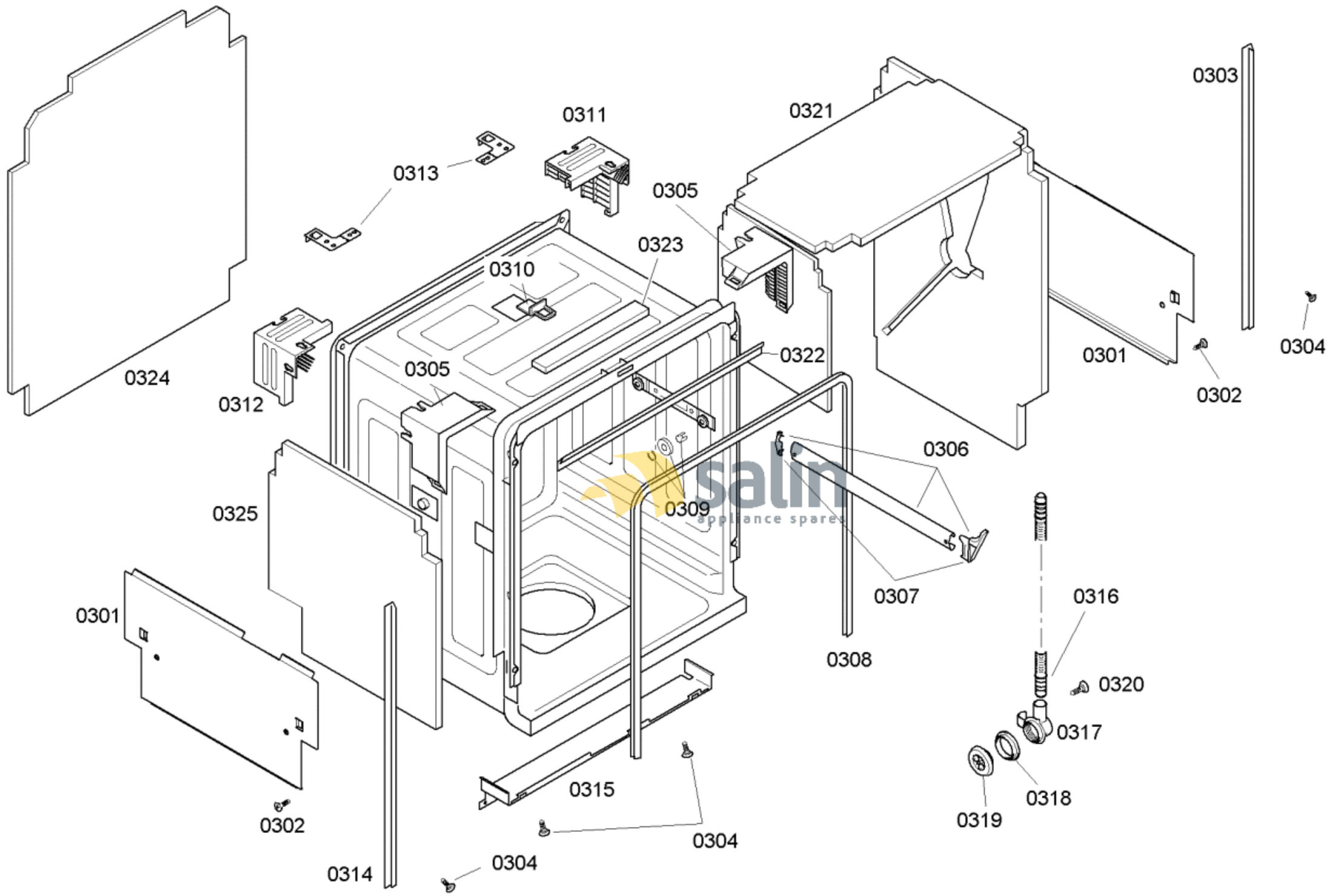

58300000121280 aet 000 c 3/6

FAMILY : SHU66C07UC

MODEL NO: SHU66C07UC/37

Check Position No/Part No or Replacement No

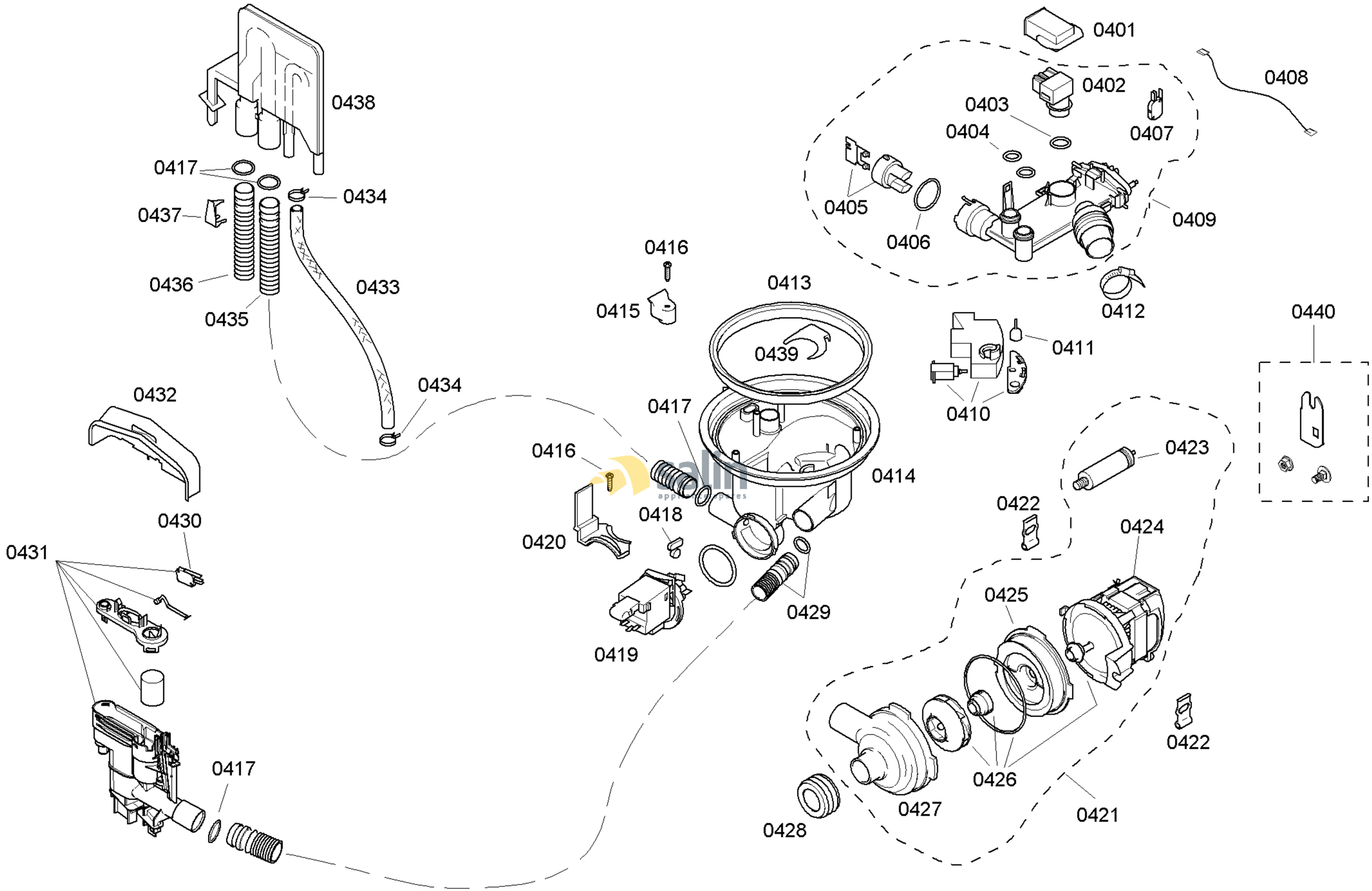

58300000121280 aet 000 c 4/6

FAMILY : SHU66C07UC
MODEL NO: SHU66C07UC/37
Check Position No/Part No or Replacement No

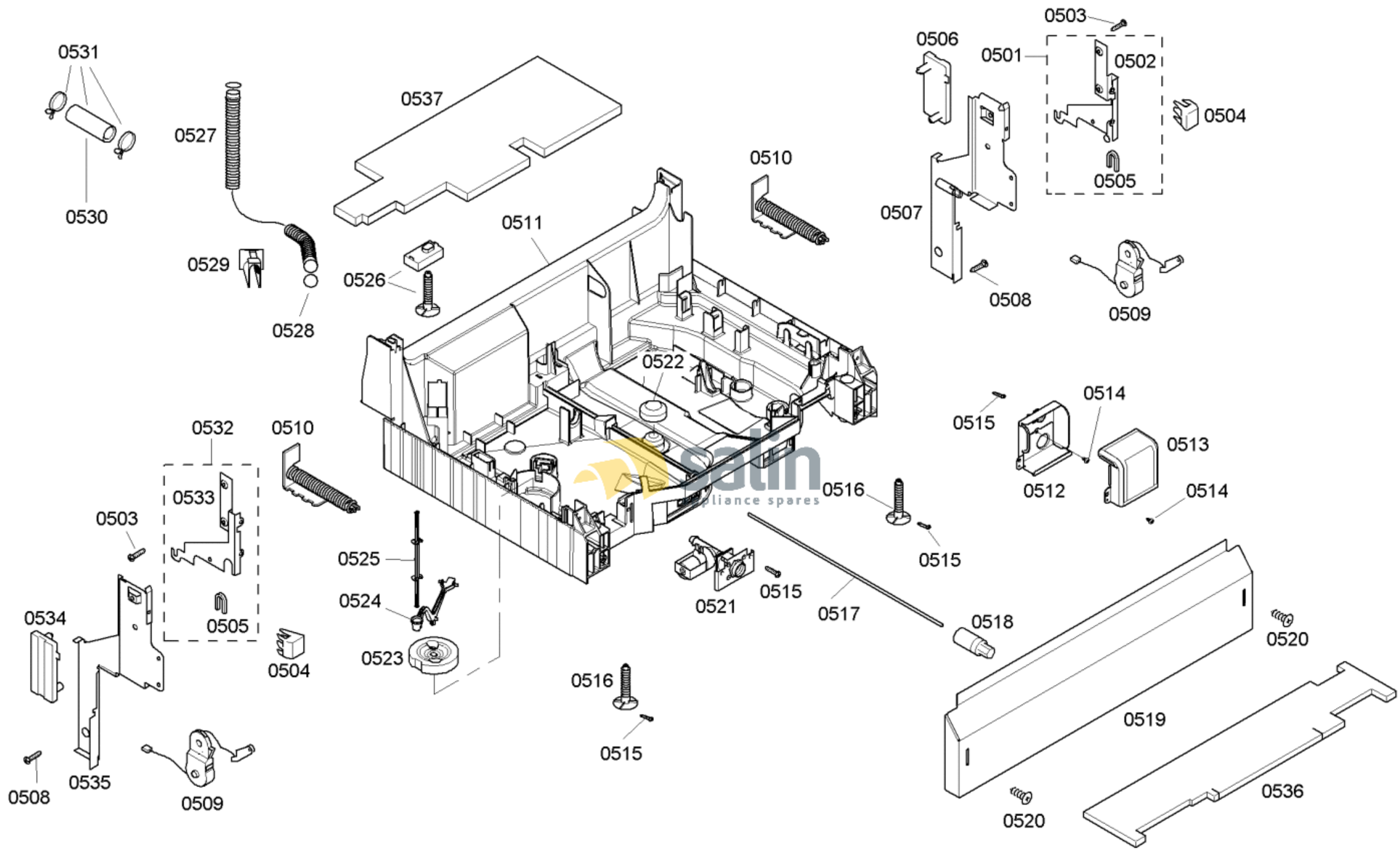

58300000121280 aet 000 c 5/6

FAMILY : SHU66C07UC

MODEL NO: SHU66C07UC/37

Check Position No/Part No or Replacement No

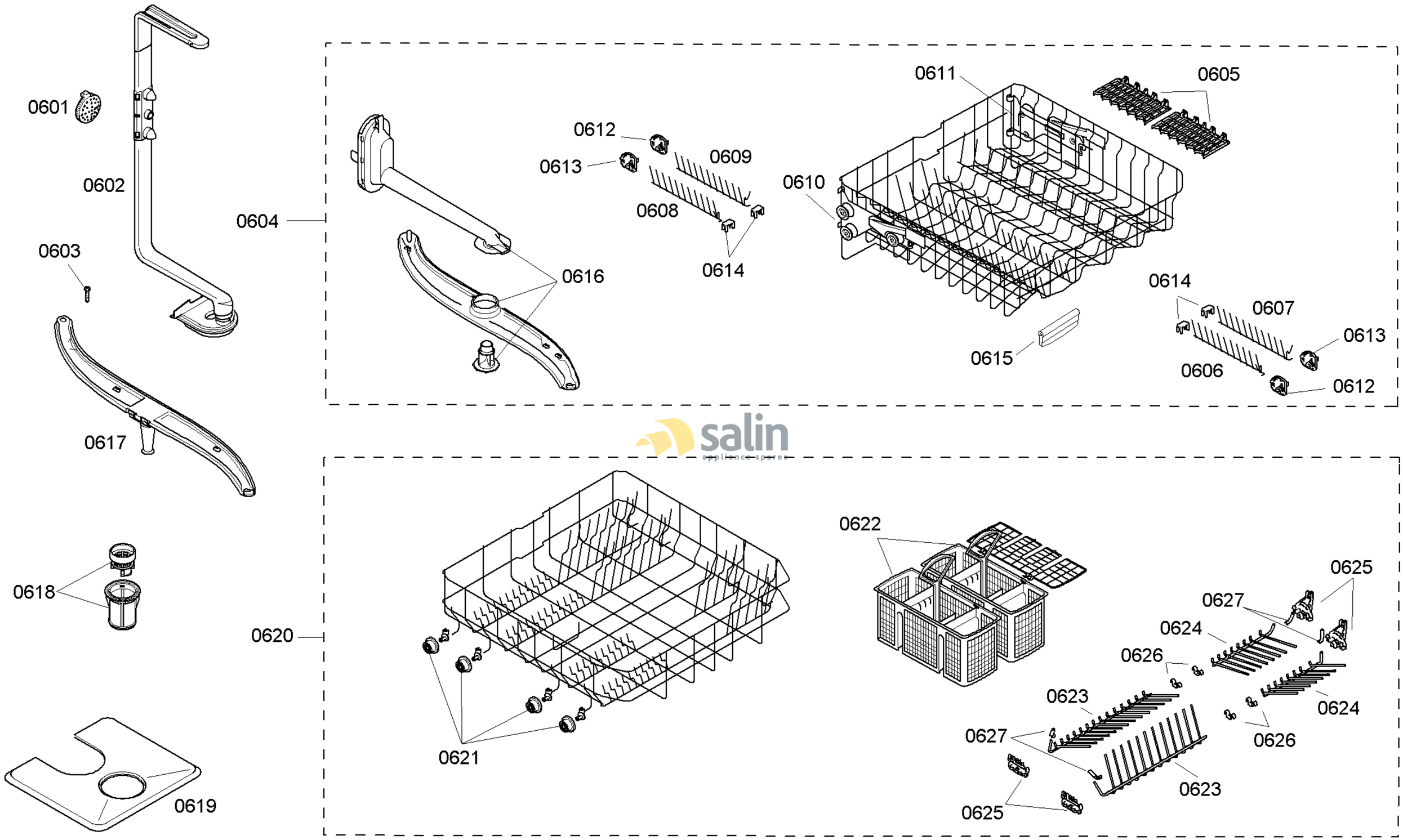

salin
appliance spares

58300000121280 aet 000 c 6/6

FAMILY : SHU66C07UC
MODEL NO: SHU66C07UC/37
Check Position No/Part No or Replacement No