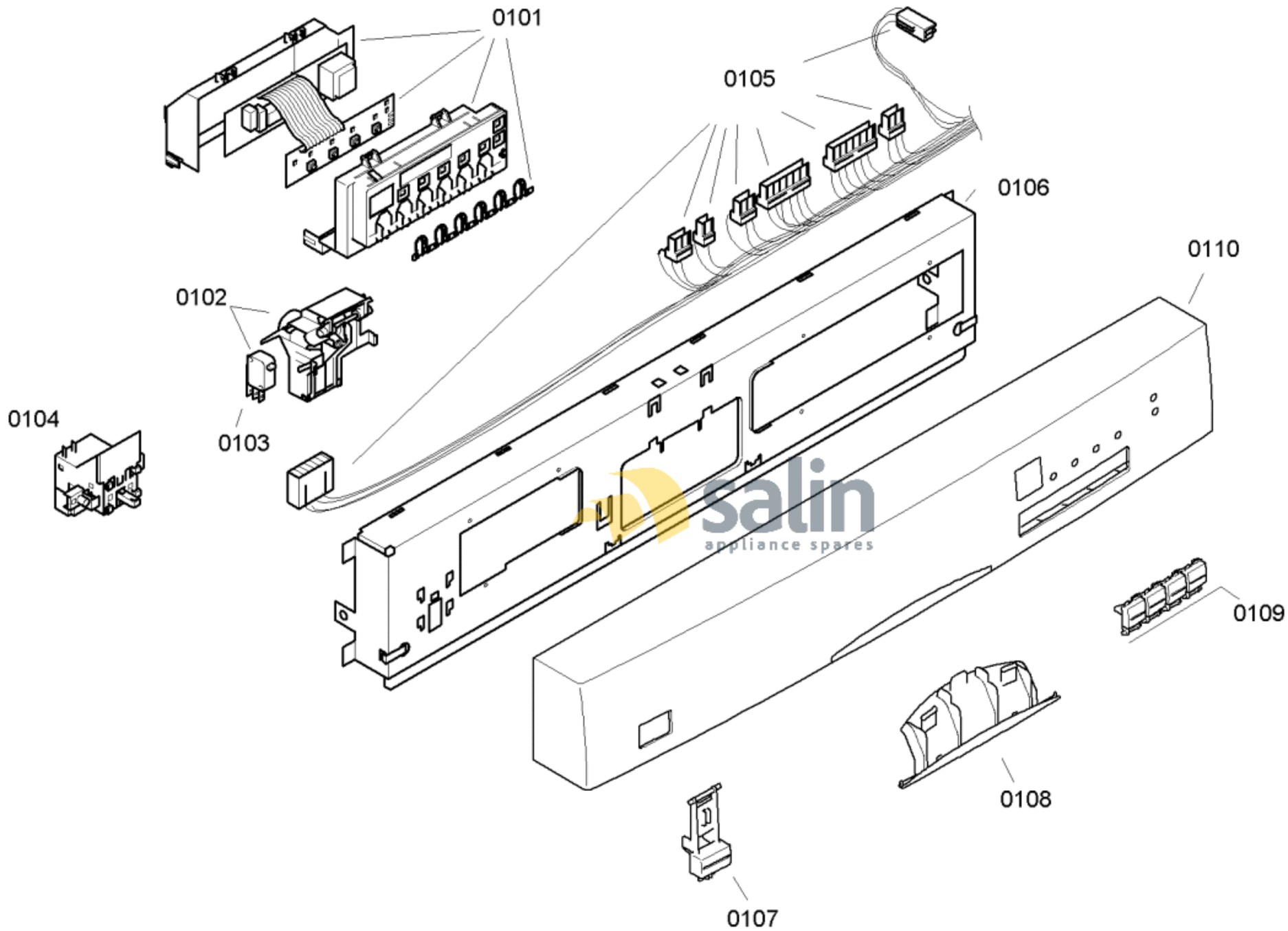

salin
appliance spares

58300000108968 aet 000 c 1/6

FAMILY : SGS46M02EP

MODEL NO: SGS46M02EP/71

Check Position No/Part No or Replacement No

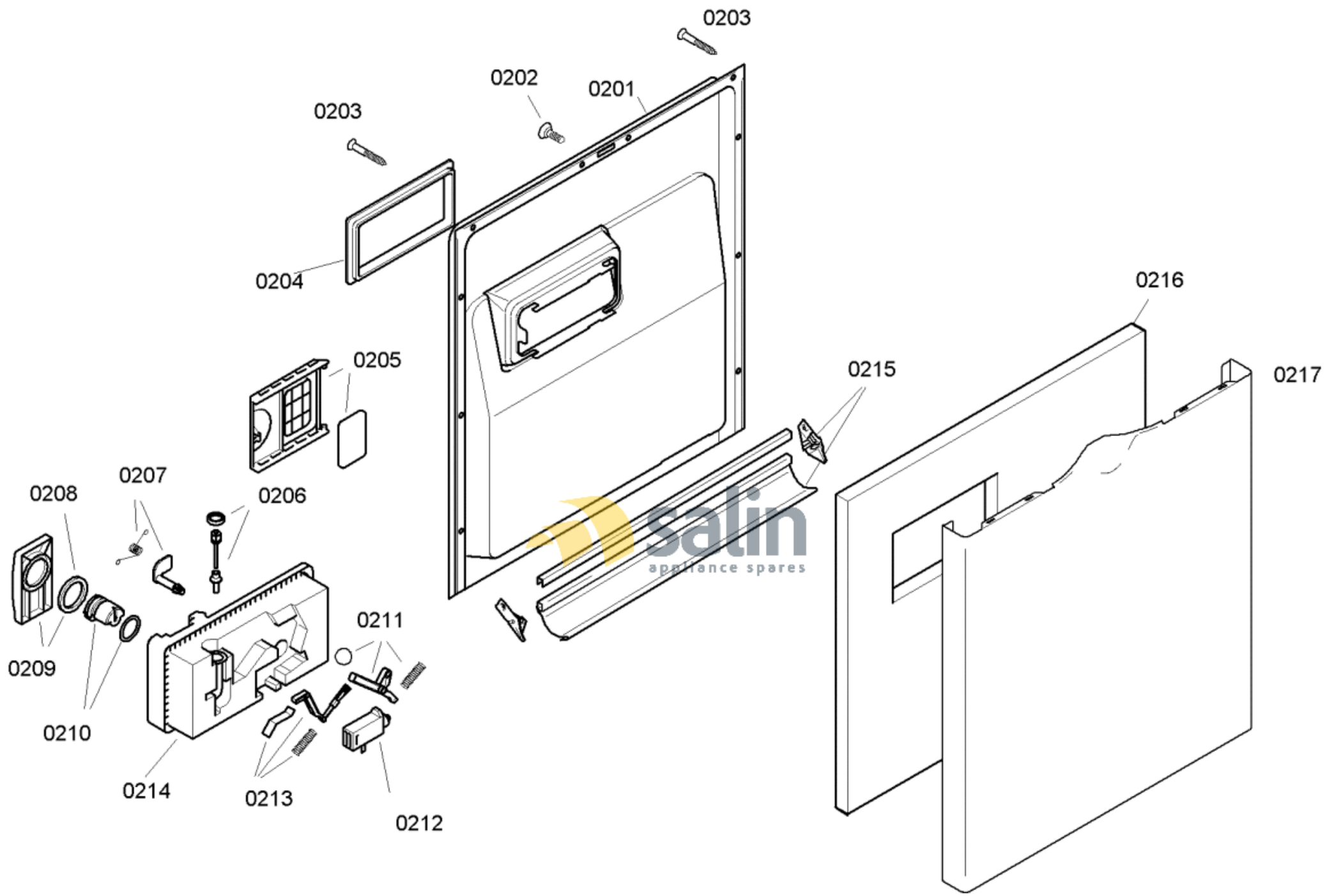

58300000108968 aet 000 c 2/6

FAMILY : SGS46M02EP

MODEL NO: SGS46M02EP/71

Check Position No/Part No or Replacement No

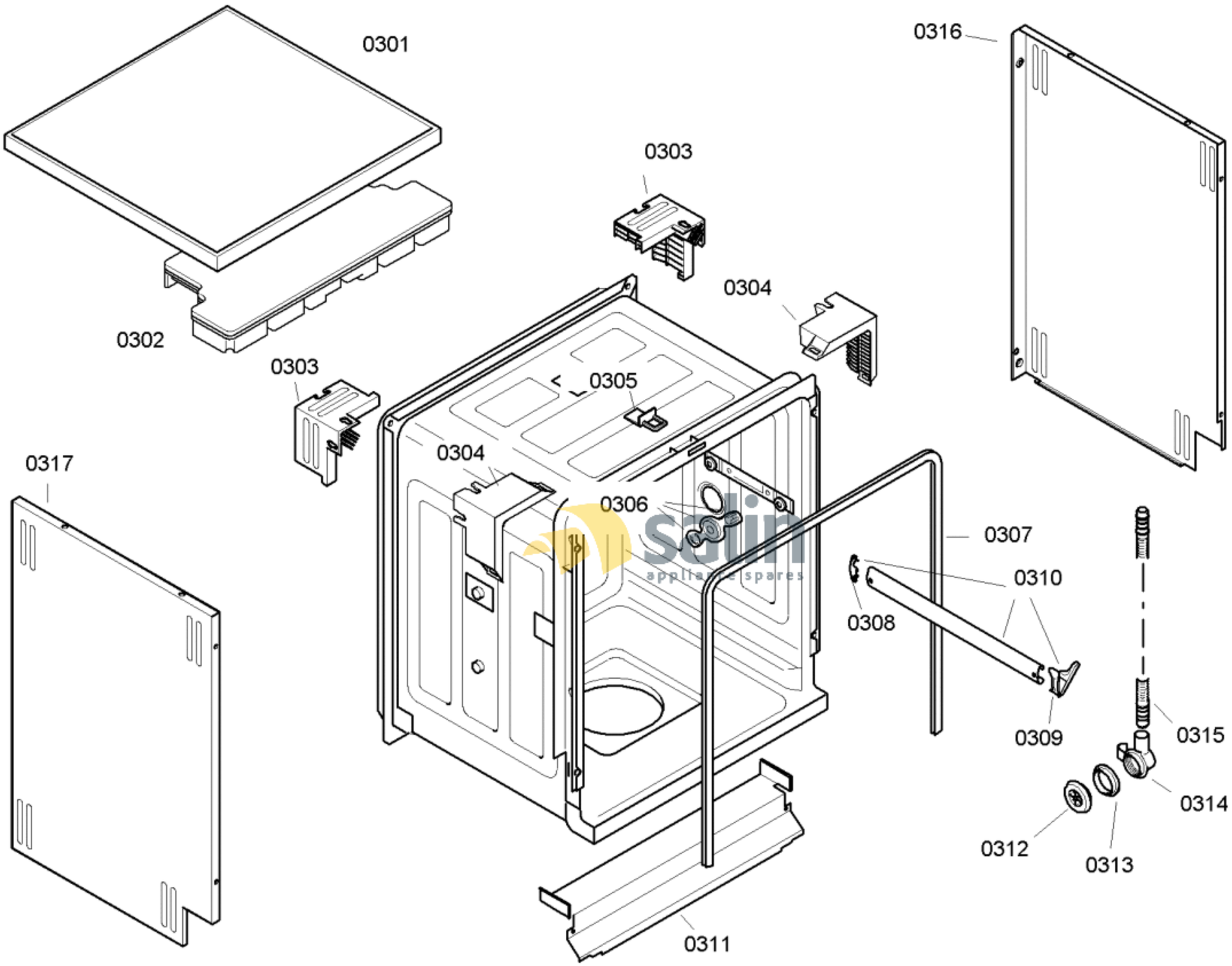

58300000108968 aet 000 c 3/6

FAMILY : SGS46M02EP

MODEL NO: SGS46M02EP/71

Check Position No/Part No or Replacement No

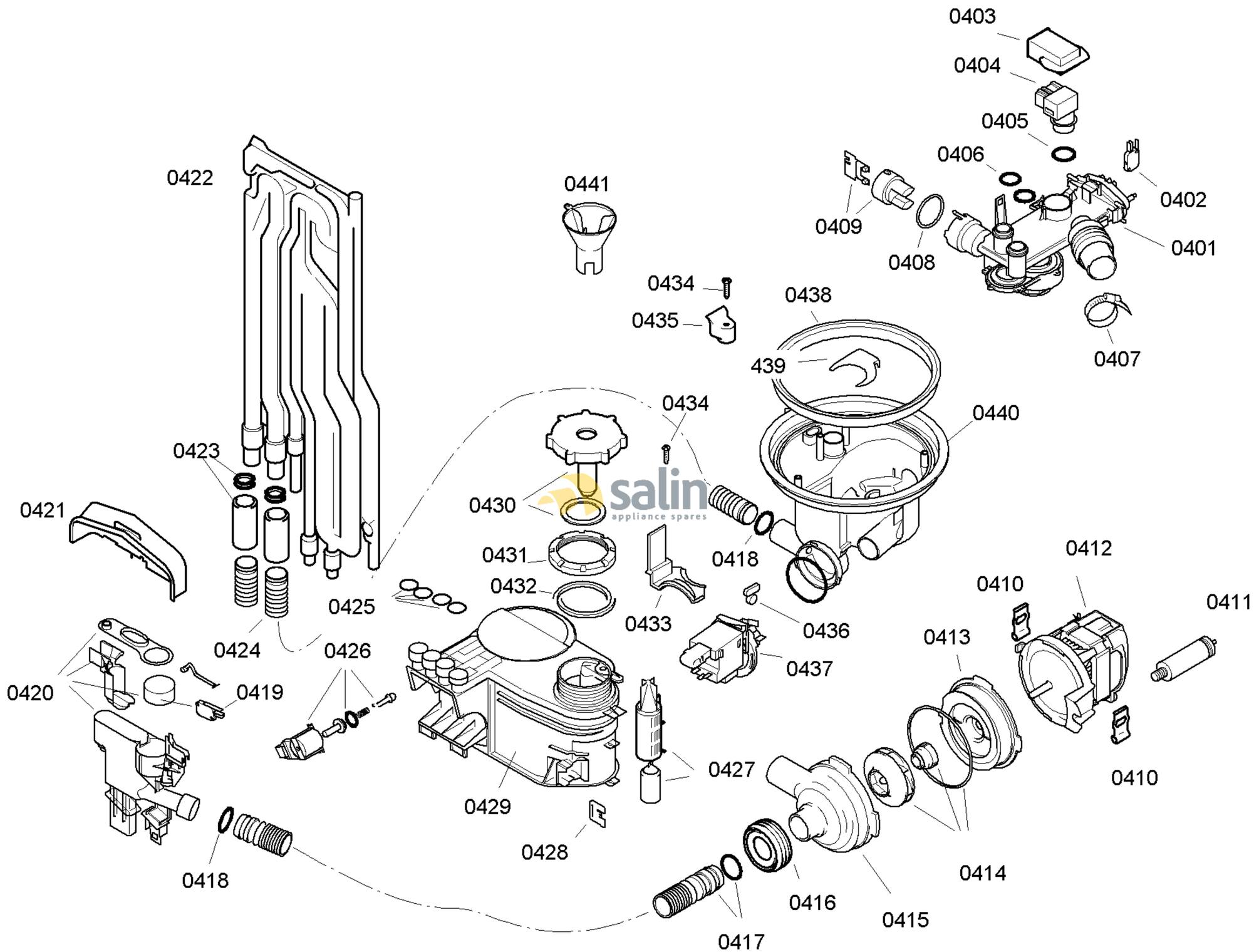

58300000108968 aet 000 c 4/6

FAMILY : SGS46M02EP
MODEL NO: SGS46M02EP/71
Check Position No/Part No or Replacement No

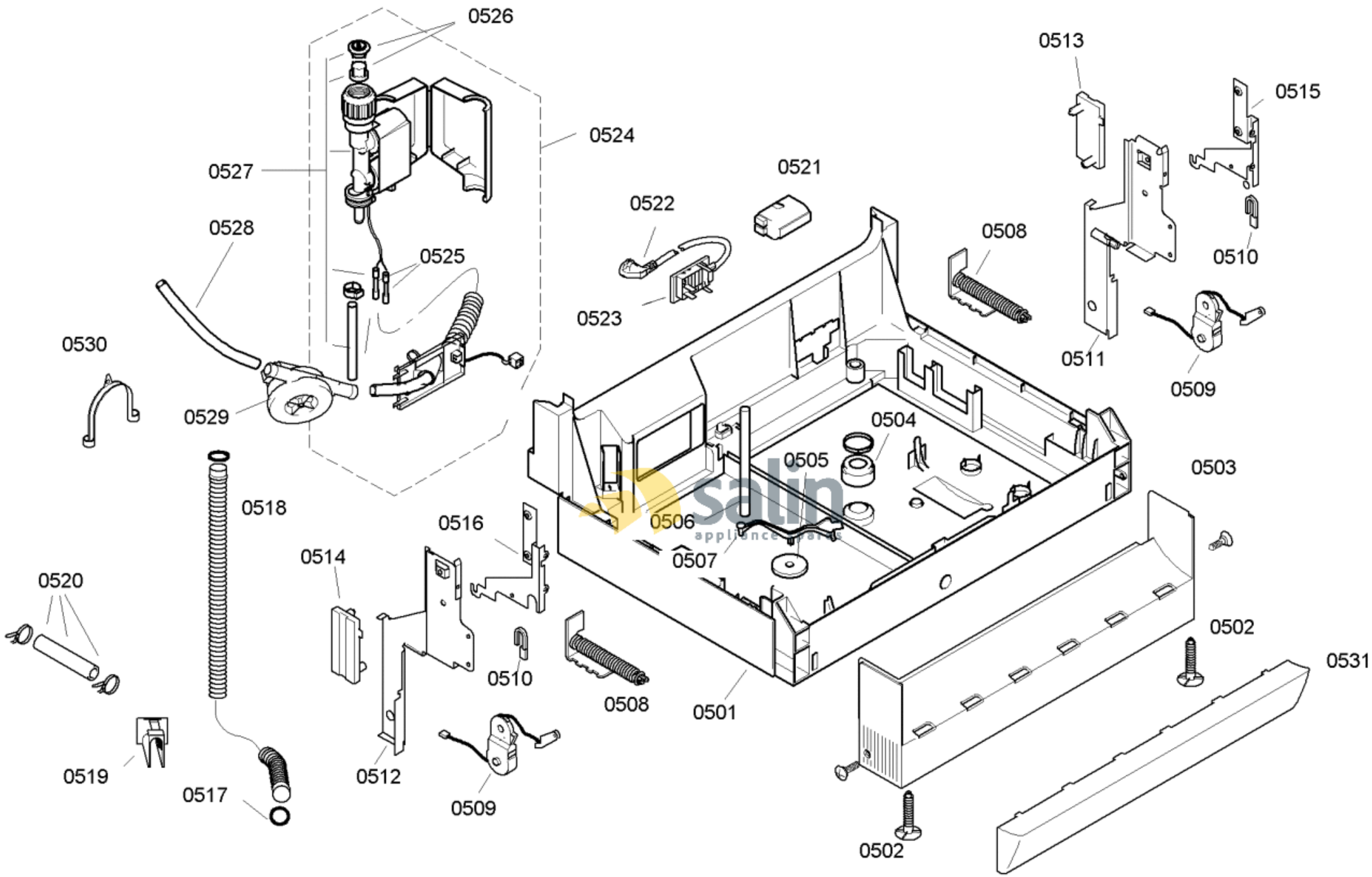

58300000108968 aet 000 c 5/6

FAMILY : SGS46M02EP

MODEL NO: SGS46M02EP/71

Check Position No/Part No or Replacement No

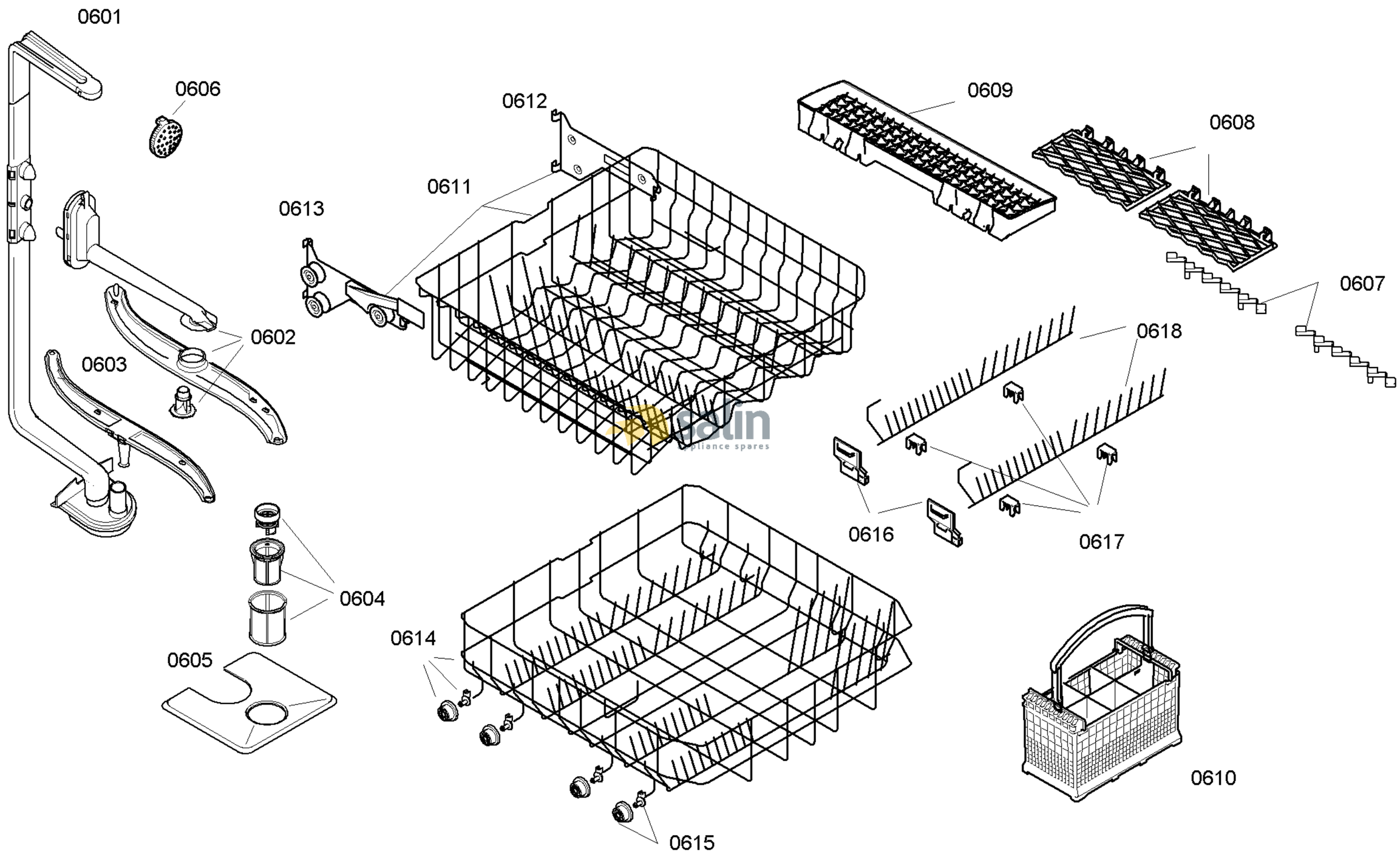

58300000108968 aet 000 c 6/6

FAMILY : SGS46M02EP
MODEL NO: SGS46M02EP/71
Check Position No/Part No or Replacement No