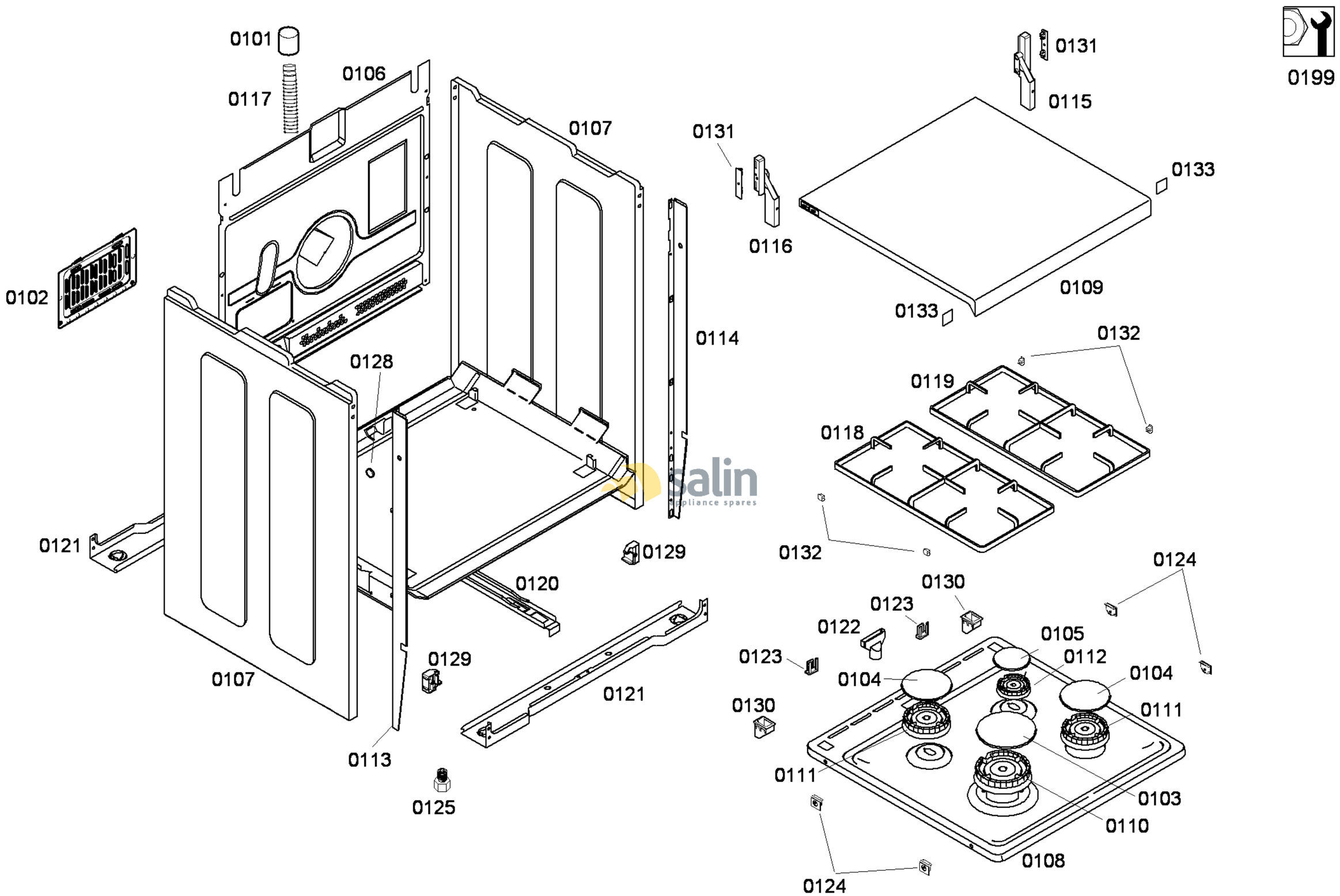

58300000143039 aet 000 a 1/6

FAMILY : HSV745020N
MODEL NO: HSV745020N/02
Check Position No/Part No or Replacement No

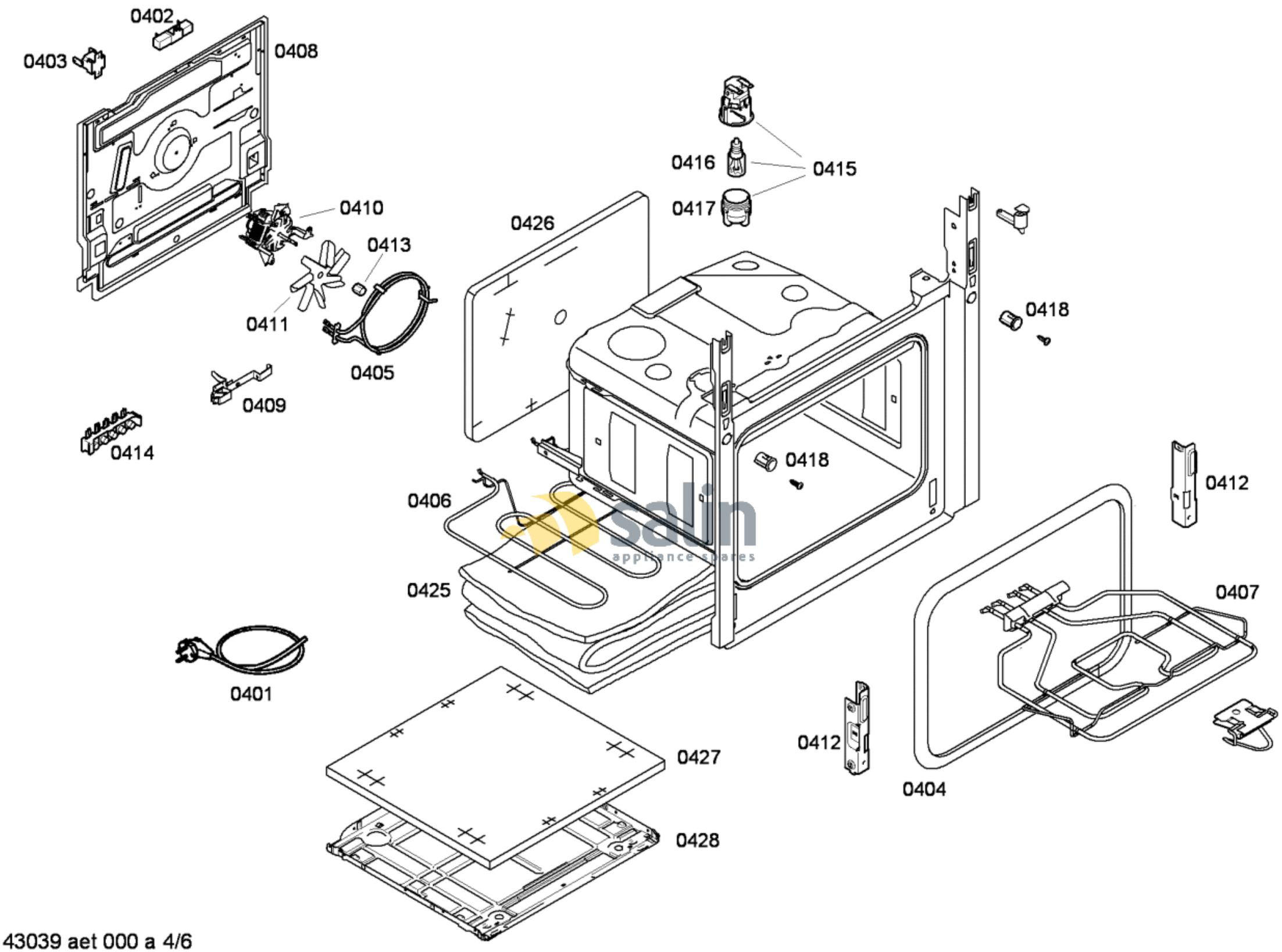

583000001 43039 aet 000 a 4/6

FAMILY : HSV745020N

MODEL NO: HSV745020N/02

Check Position No/Part No or Replacement No

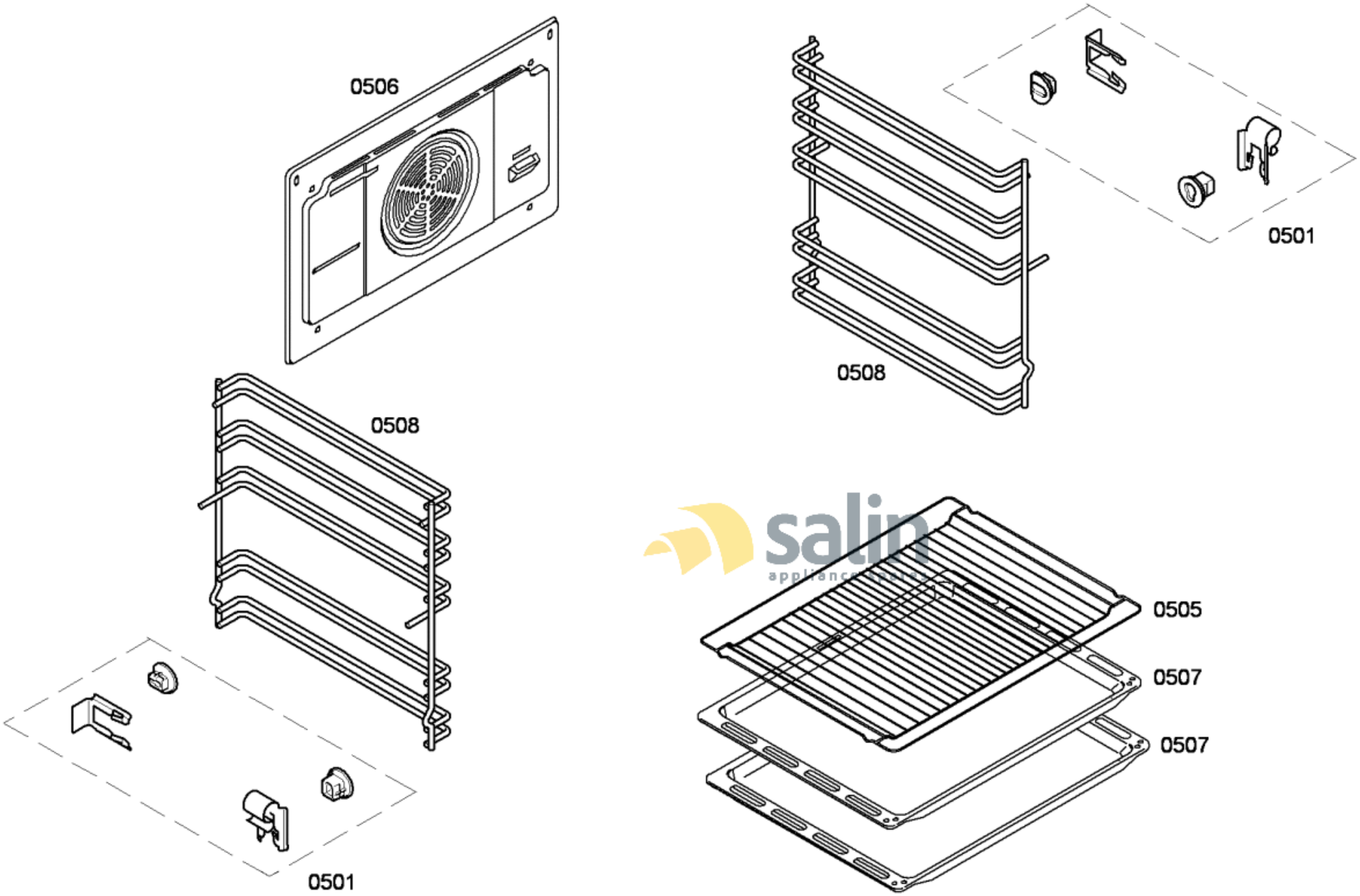

583000001 43039 aet 000 a 5/6

FAMILY : HSV745020N

MODEL NO: HSV745020N/02

Check Position No/Part No or Replacement No

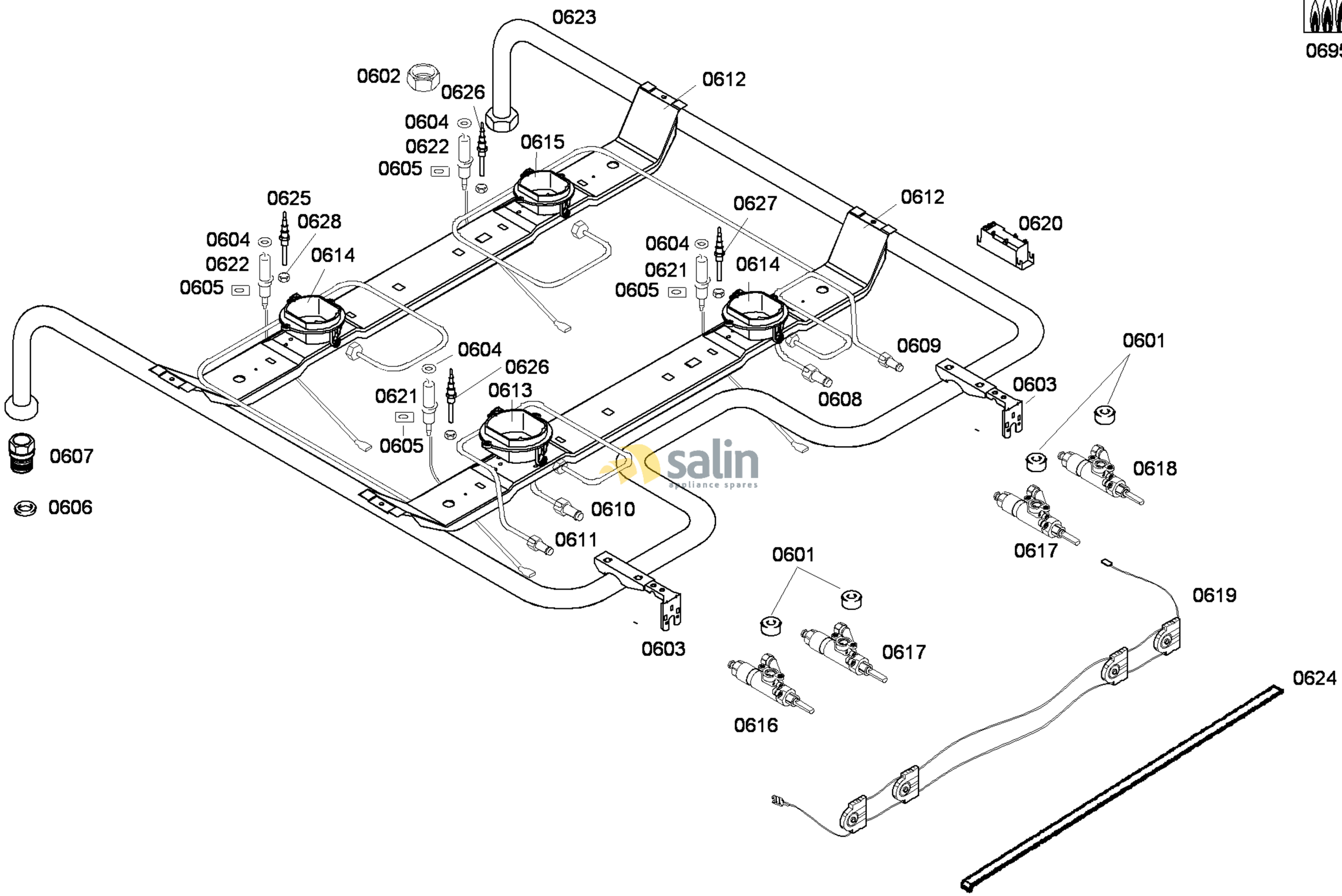

583000001 43039 aet 000 a 6/6

FAMILY : HSV745020N
MODEL NO: HSV745020N/02
Check Position No/Part No or Replacement No