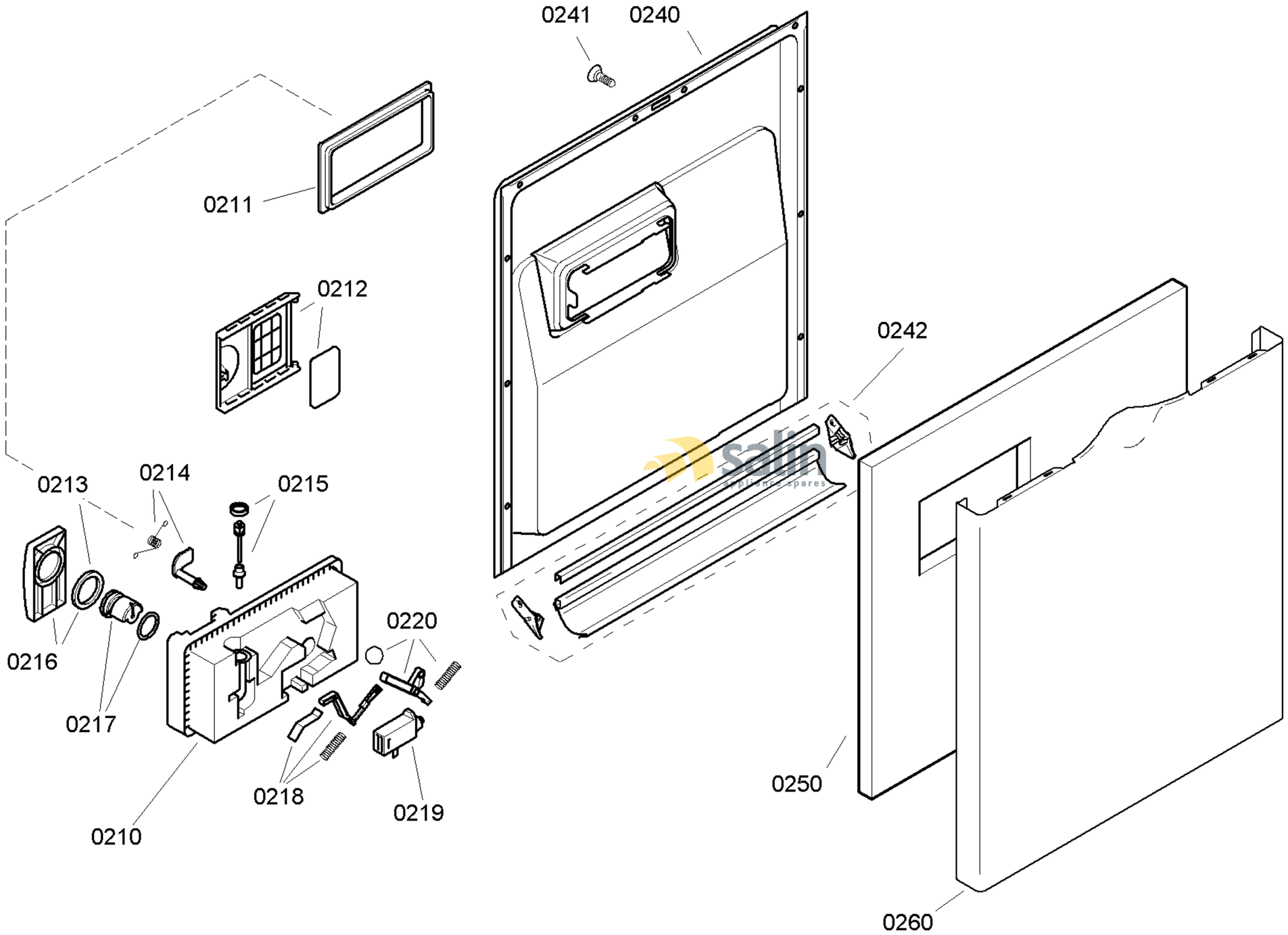

58300000107970 aet 000 e 2/6

FAMILY : SGS84M32
MODEL NO: SGS84M32/35
Check Position No/Part No or Replacement No

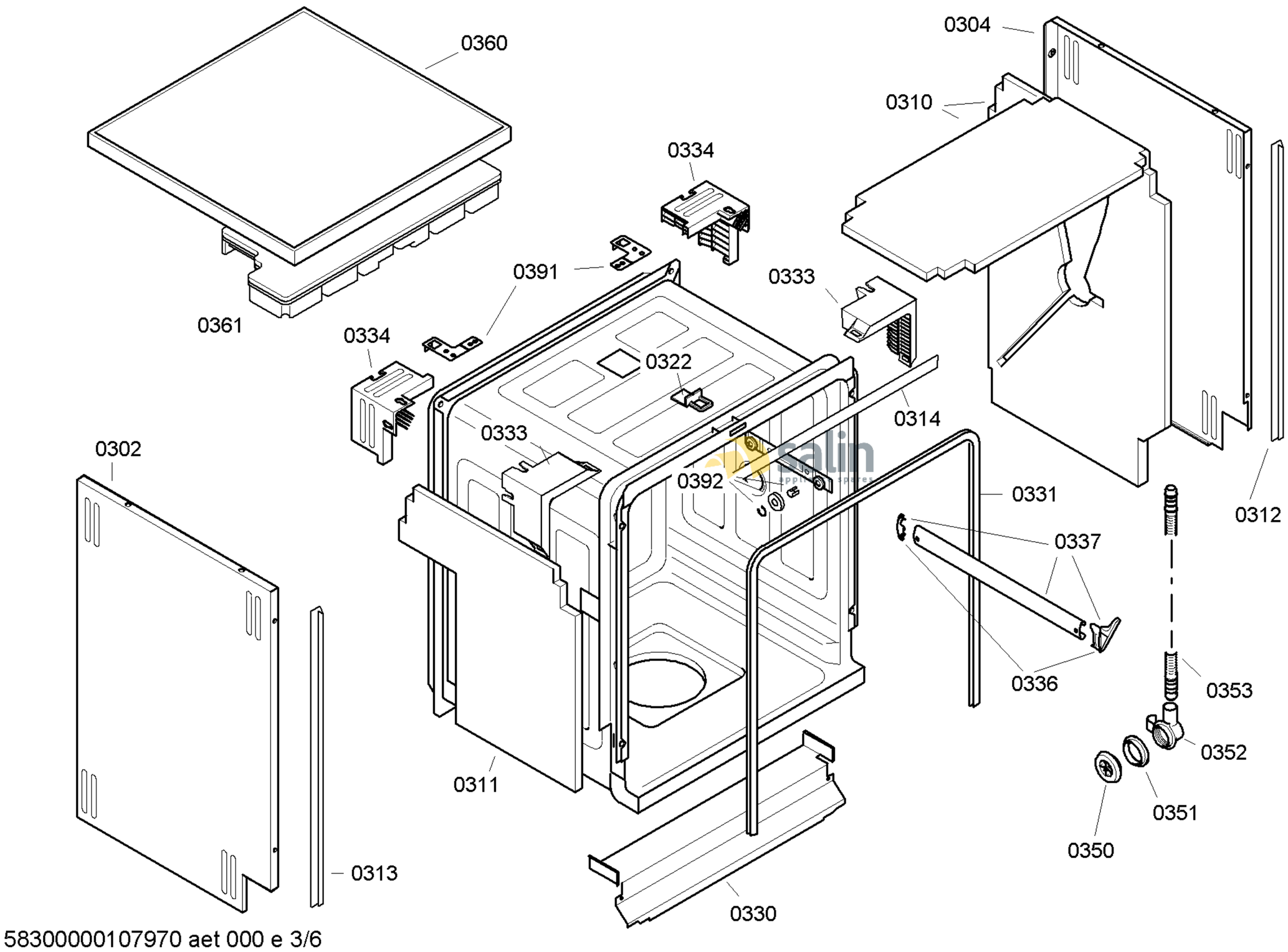

58300000107970 aet 000 e 3/6

FAMILY : SGS84M32
MODEL NO: SGS84M32/35
Check Position No/Part No or Replacement No

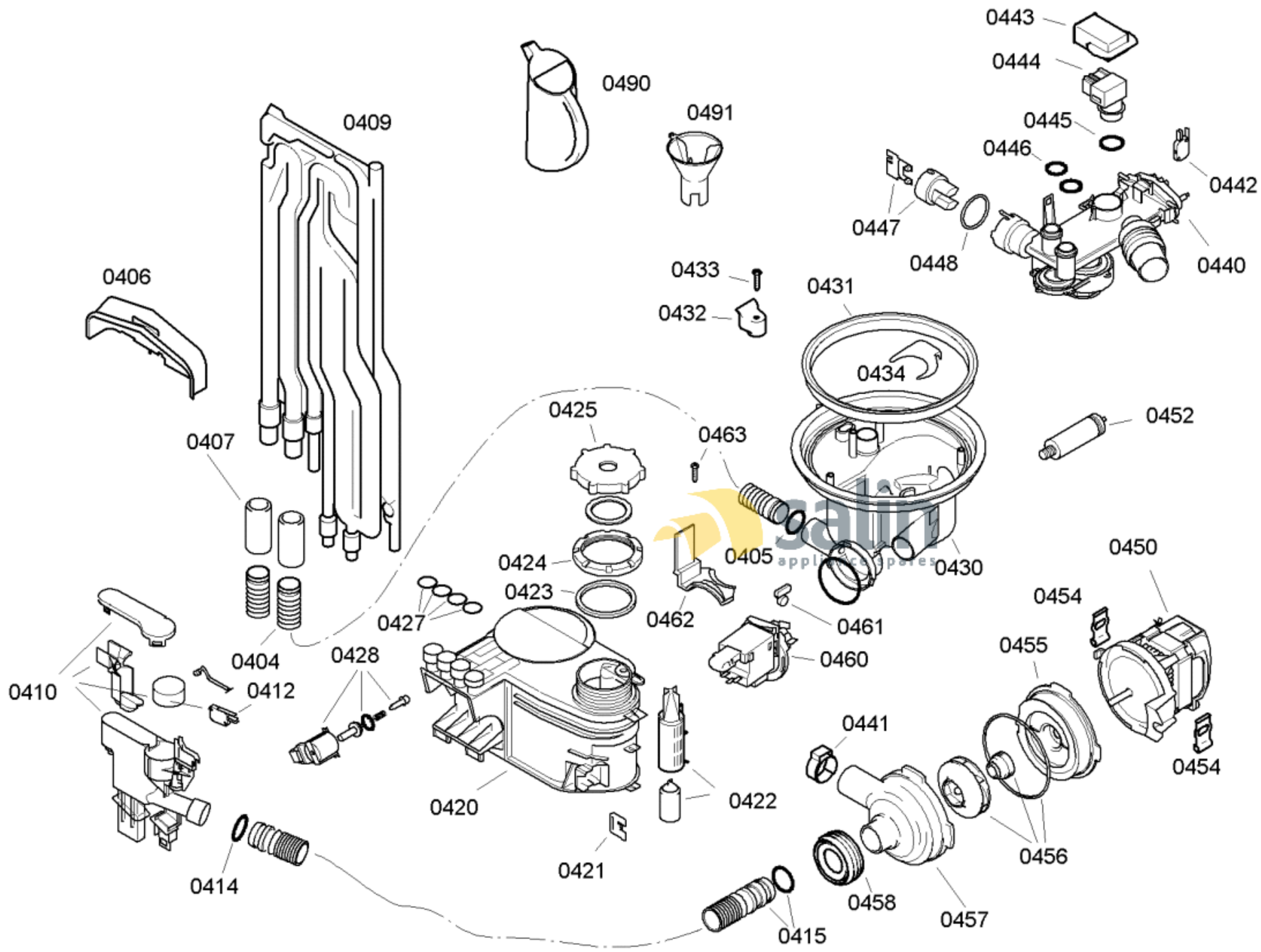

58300000107970 aet 000 e 4/6

FAMILY : SGS84M32

MODEL NO: SGS84M32/35

Check Position No/Part No or Replacement No

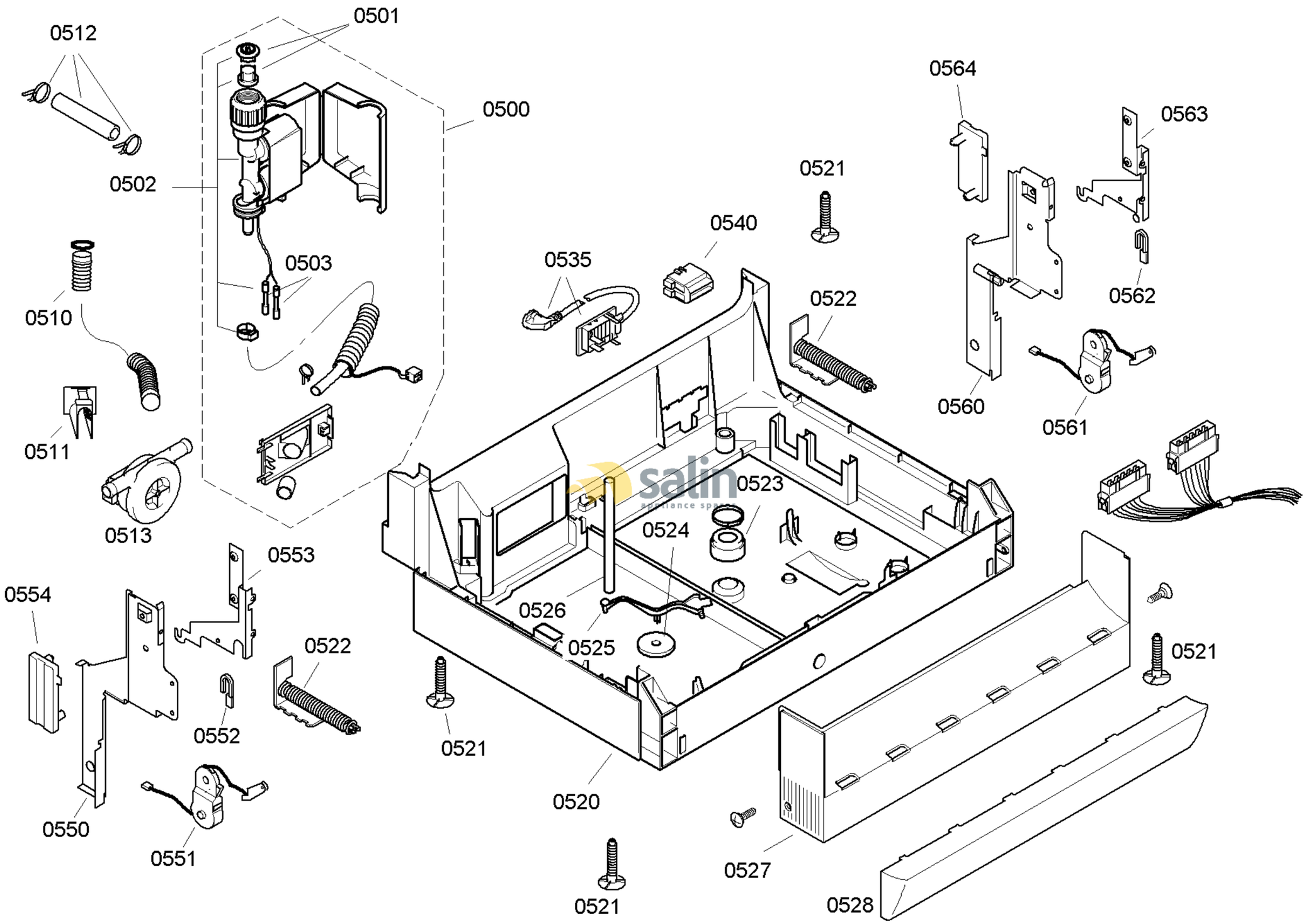

58300000107970 aet 000 e 5/6

FAMILY : SGS84M32
MODEL NO: SGS84M32/35
Check Position No/Part No or Replacement No

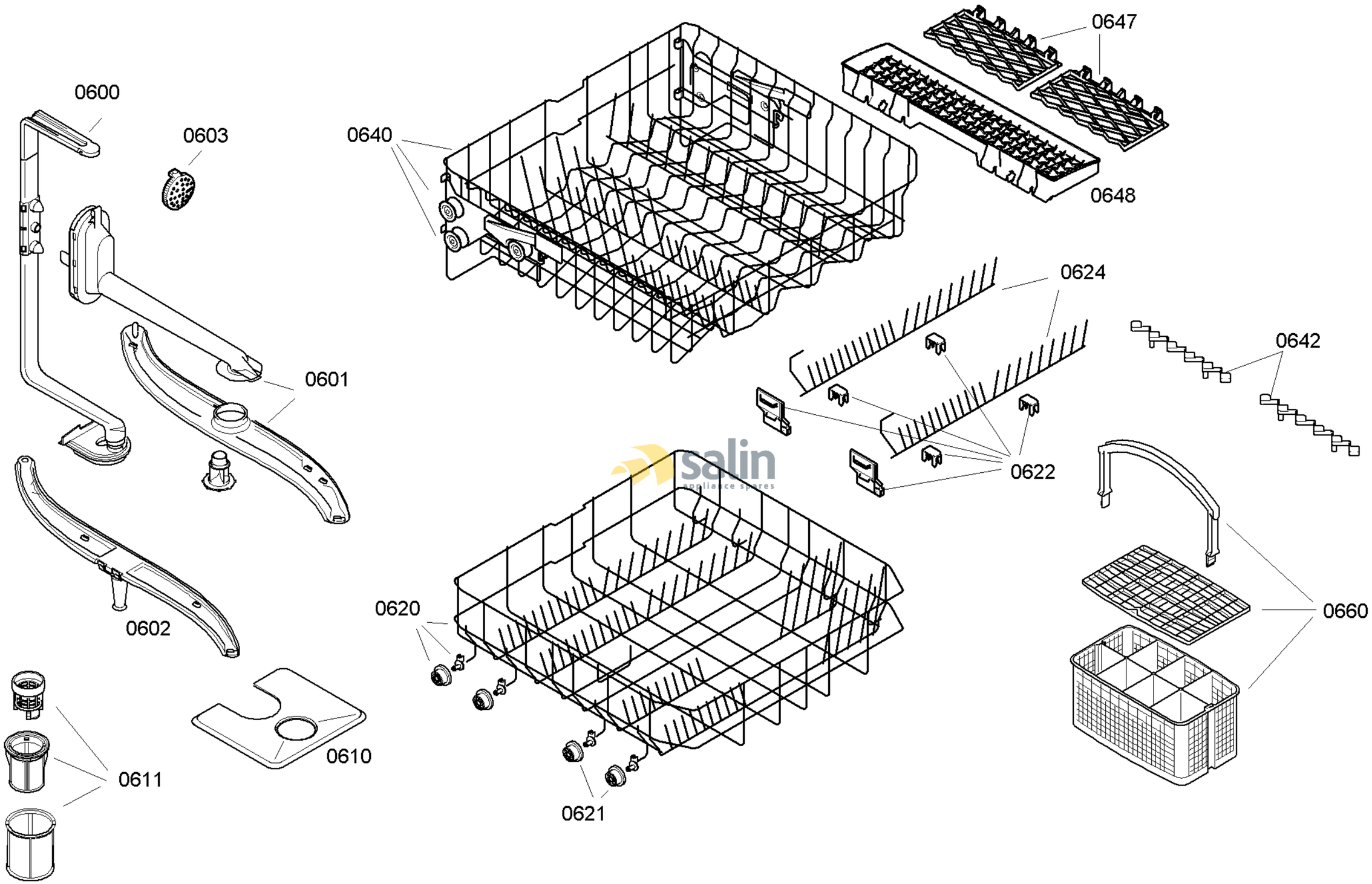

58300000107970 aet 000 e 6/6

FAMILY : SGS84M32
MODEL NO: SGS84M32/35
Check Position No/Part No or Replacement No