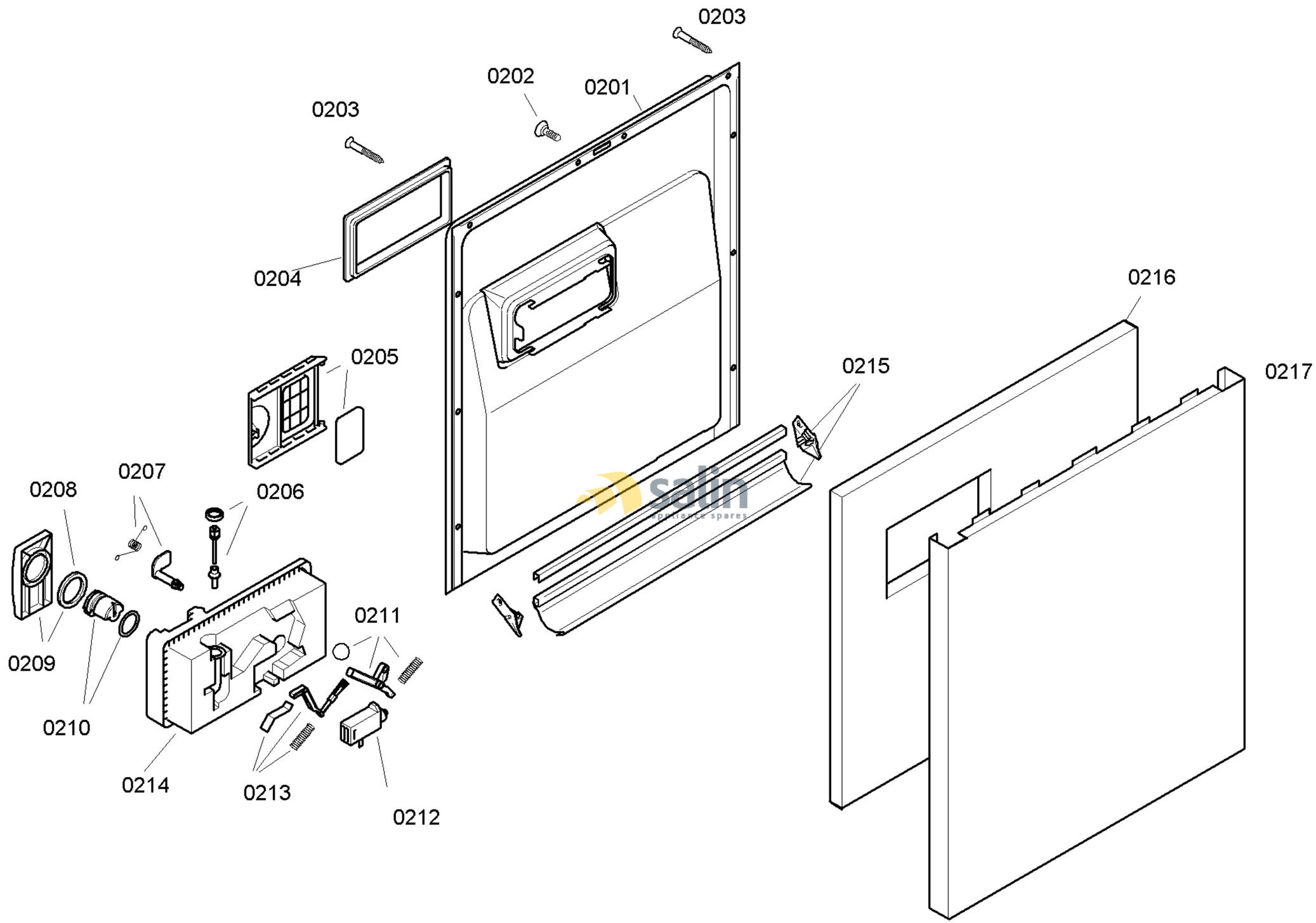

58300000119606 aet 000 c 2/6

FAMILY : SGS44E08EU
MODEL NO: SGS44E08EU/75
Check Position No/Part No or Replacement No

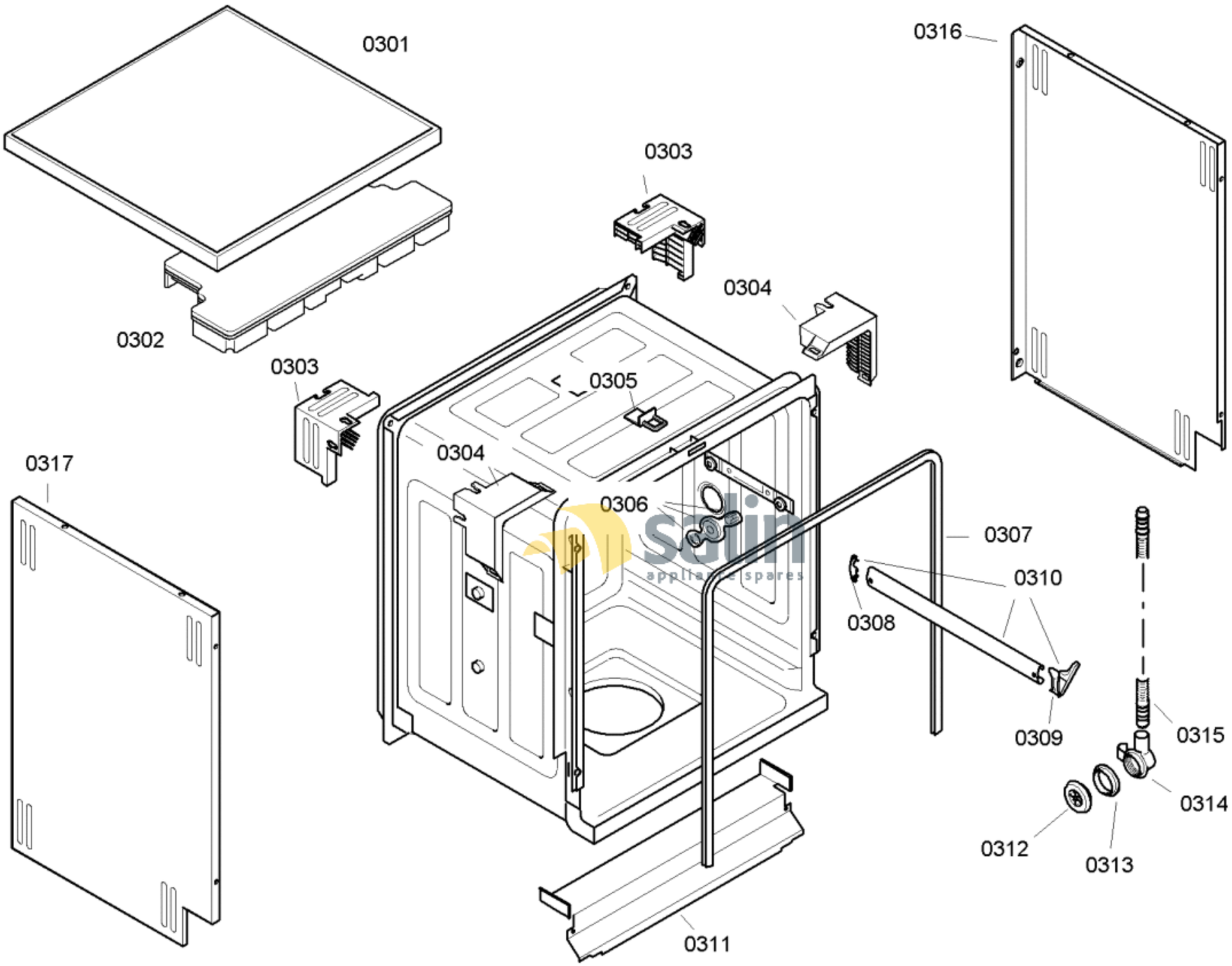

58300000119606 aet 000 c 3/6

FAMILY : SGS44E08EU

MODEL NO: SGS44E08EU/75

Check Position No/Part No or Replacement No

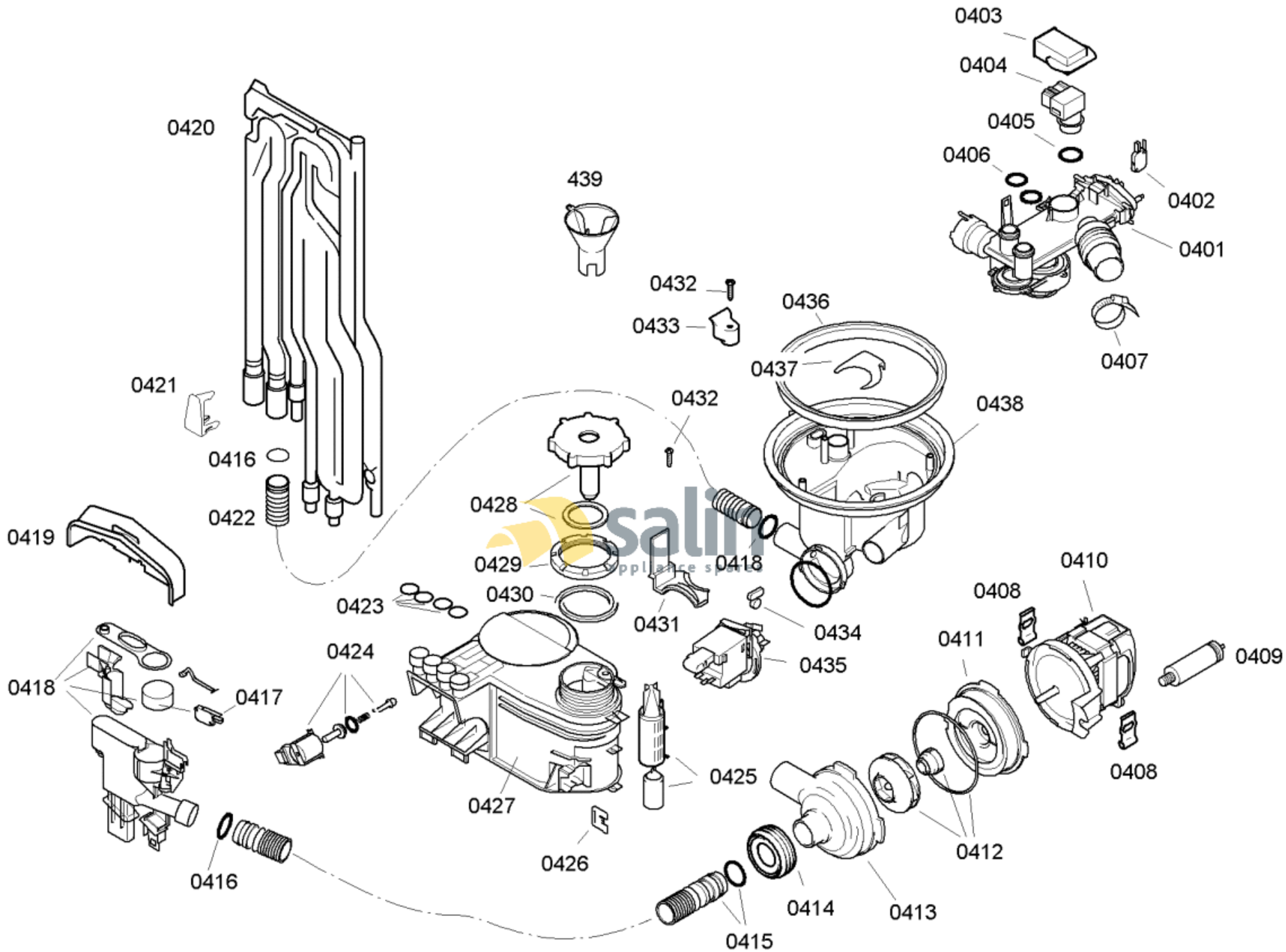

58300000119606 aet 000 c 4/6

FAMILY : SGS44E08EU

MODEL NO: SGS44E08EU/75

Check Position No/Part No or Replacement No

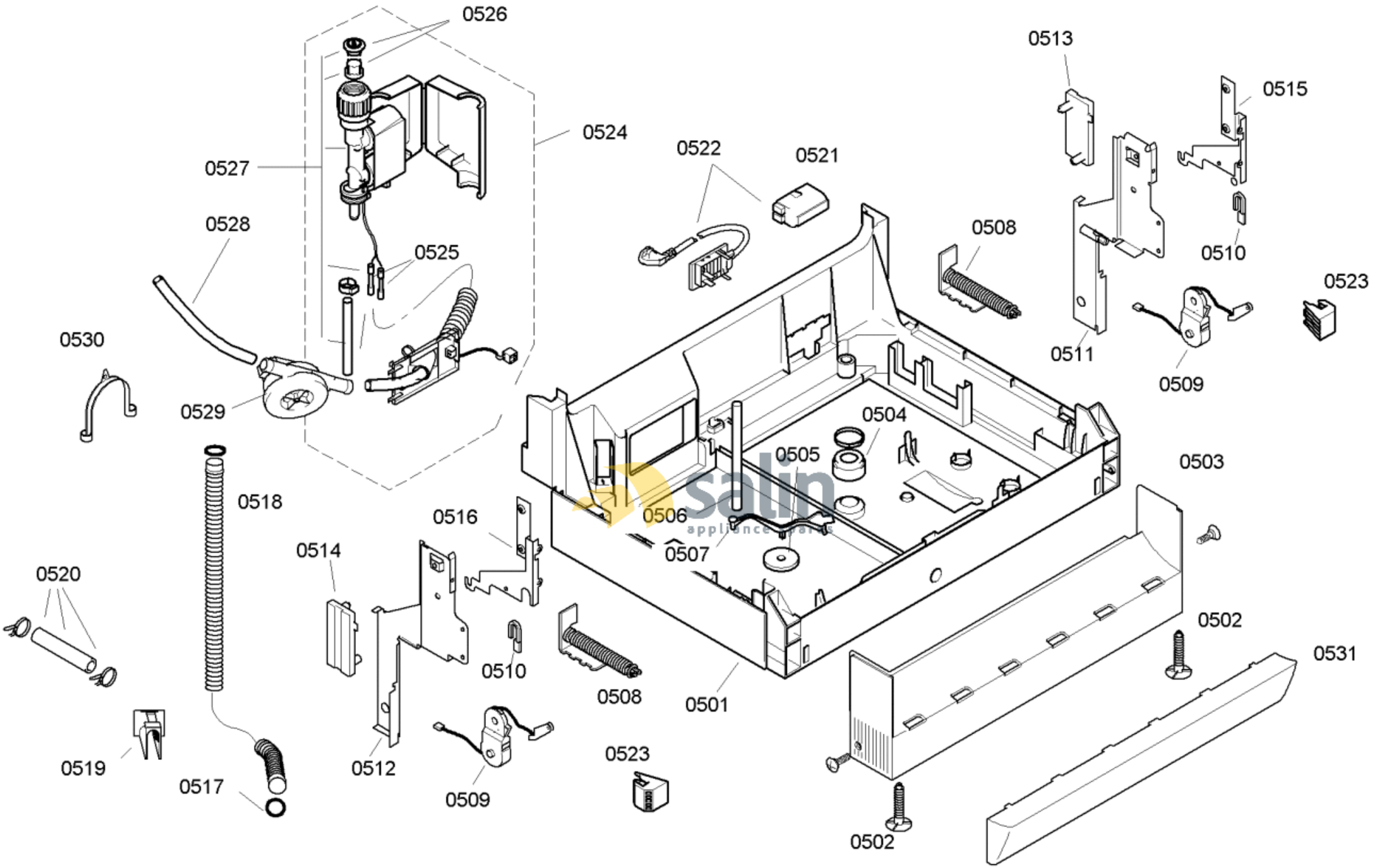

58300000119606 aet 000 c 5/6

FAMILY : SGS44E08EU

MODEL NO: SGS44E08EU/75

Check Position No/Part No or Replacement No

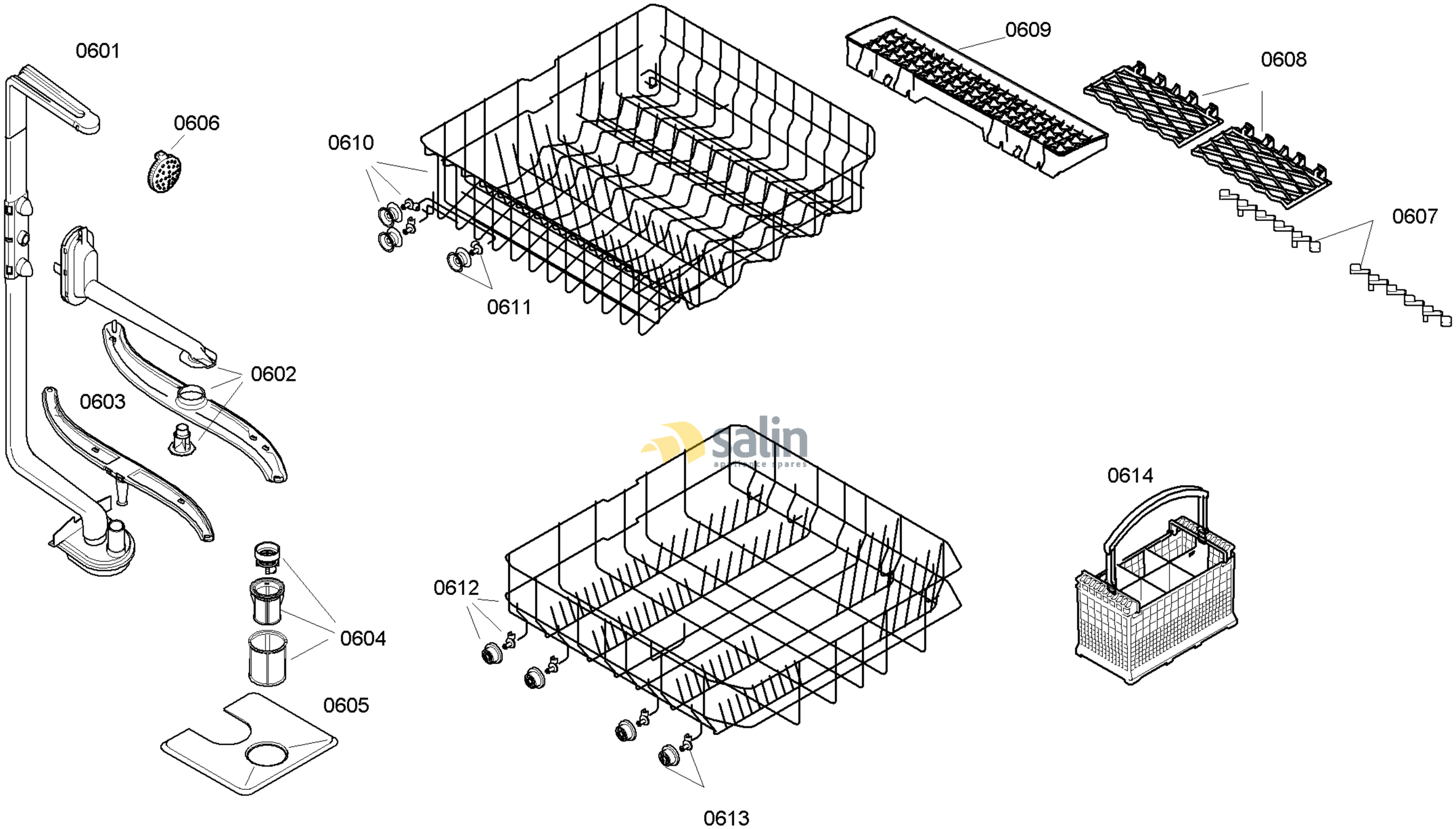

58300000119606 aet 000 c 6/6

FAMILY : SGS44E08EU
MODEL NO: SGS44E08EU/75
Check Position No/Part No or Replacement No