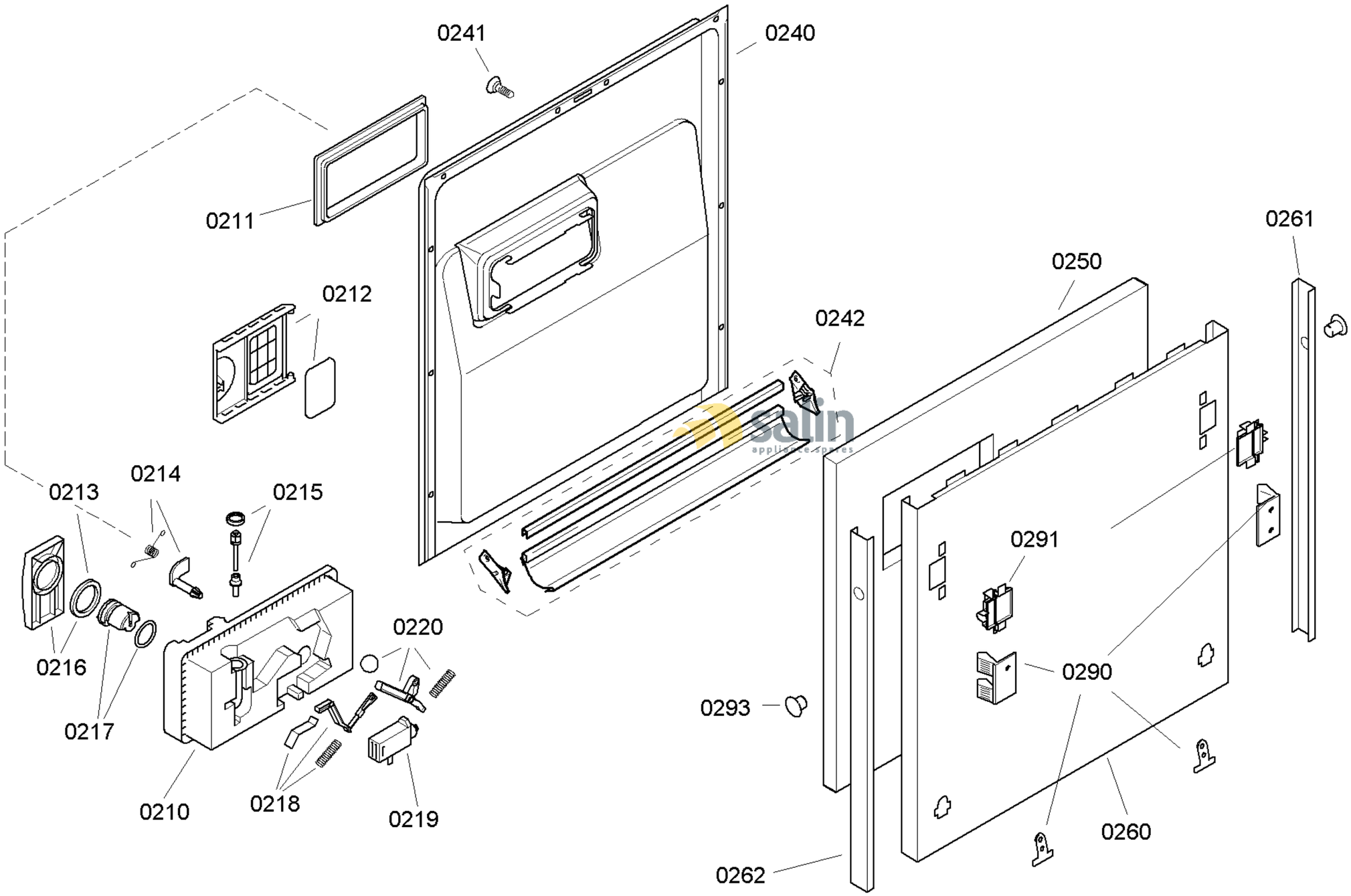

58300000108648 aet 000 b 2/6

FAMILY : SGI57M25EU
MODEL NO: SGI57M25EU/32
Check Position No/Part No or Replacement No

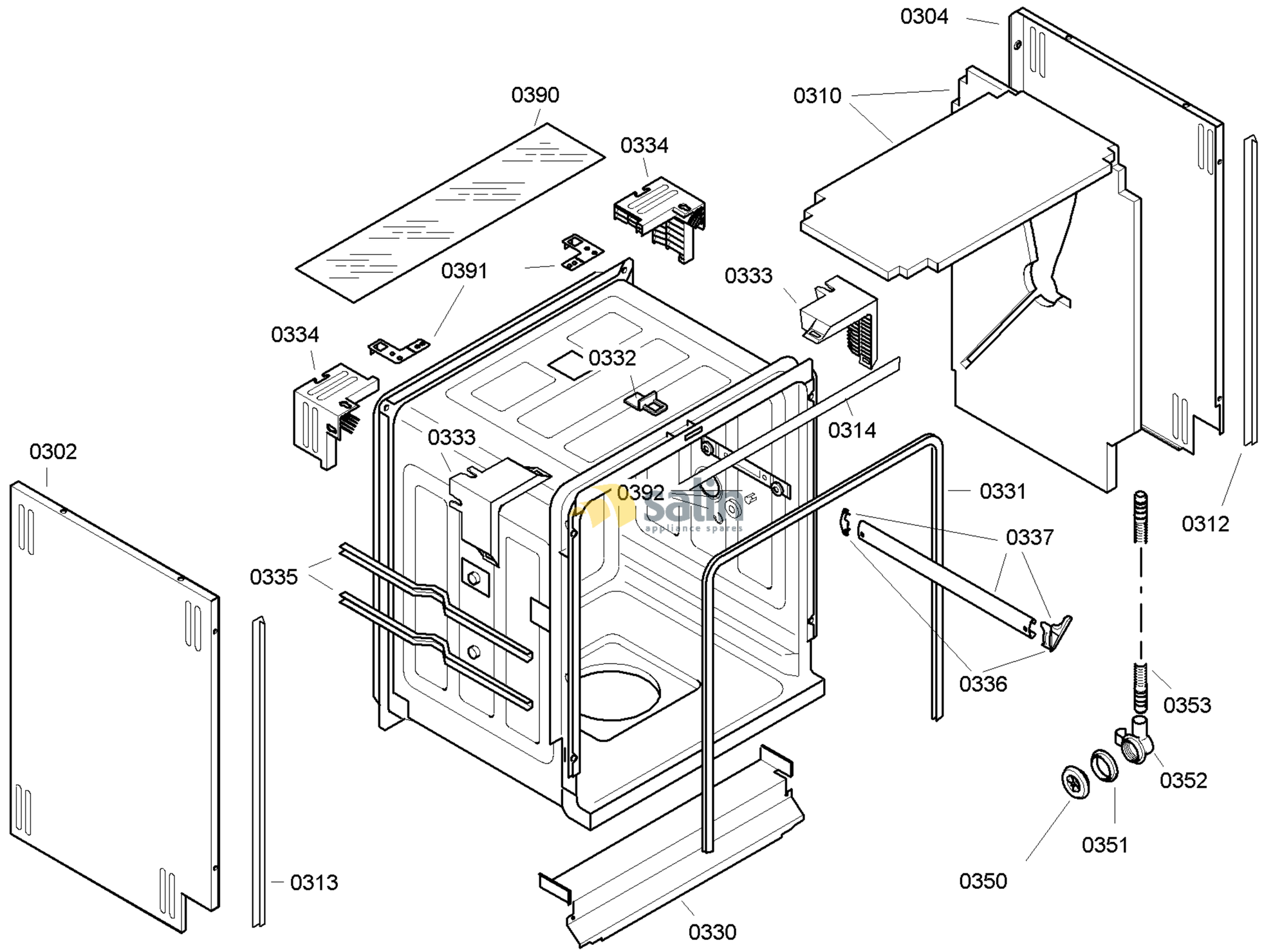

58300000108648 aet 000 b 3/6

FAMILY : SGI57M25EU
MODEL NO: SGI57M25EU/32
Check Position No/Part No or Replacement No

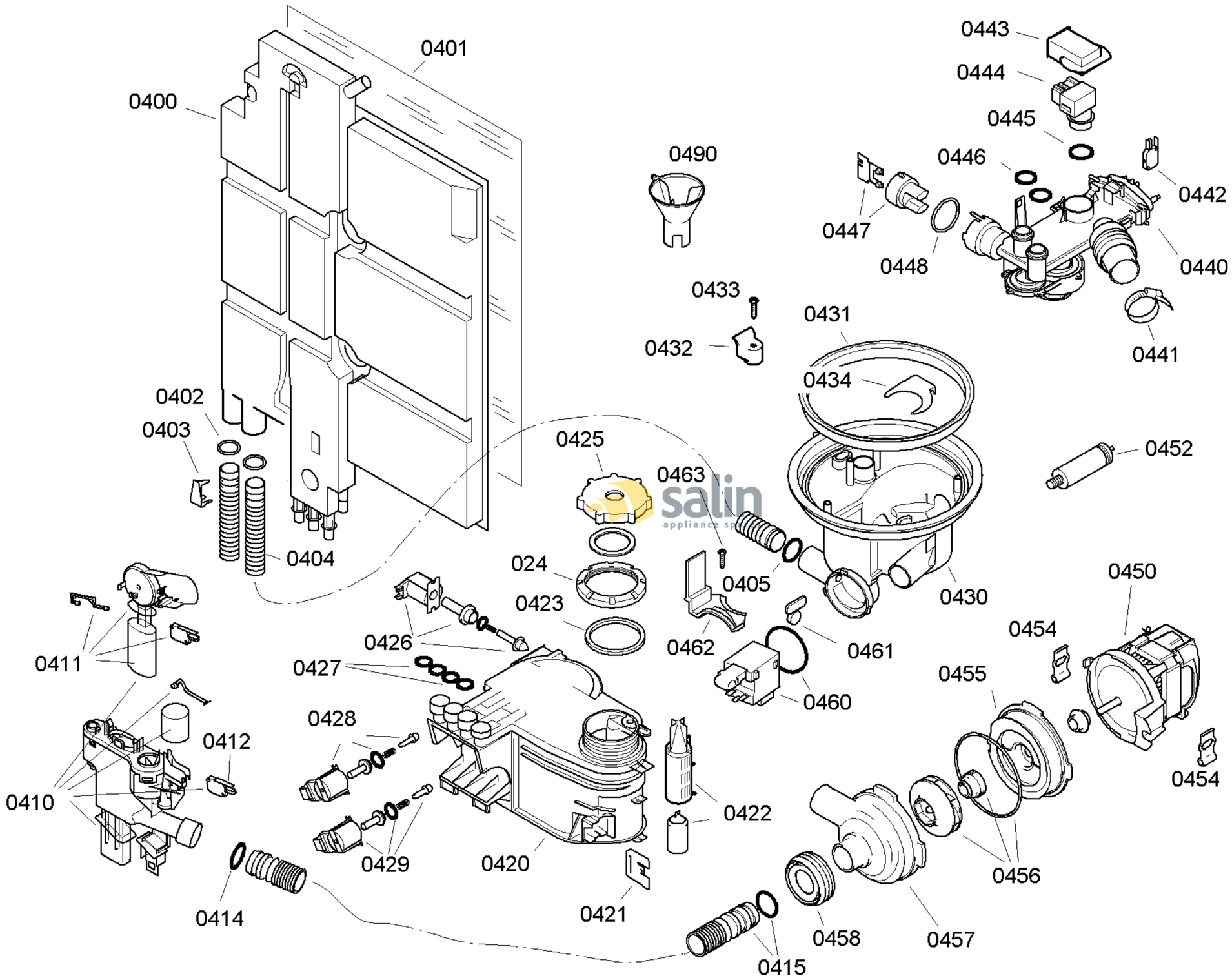

58300000108648 aet 000 b 4/6

FAMILY : SGI57M25EU
MODEL NO: SGI57M25EU/32
Check Position No/Part No or Replacement No

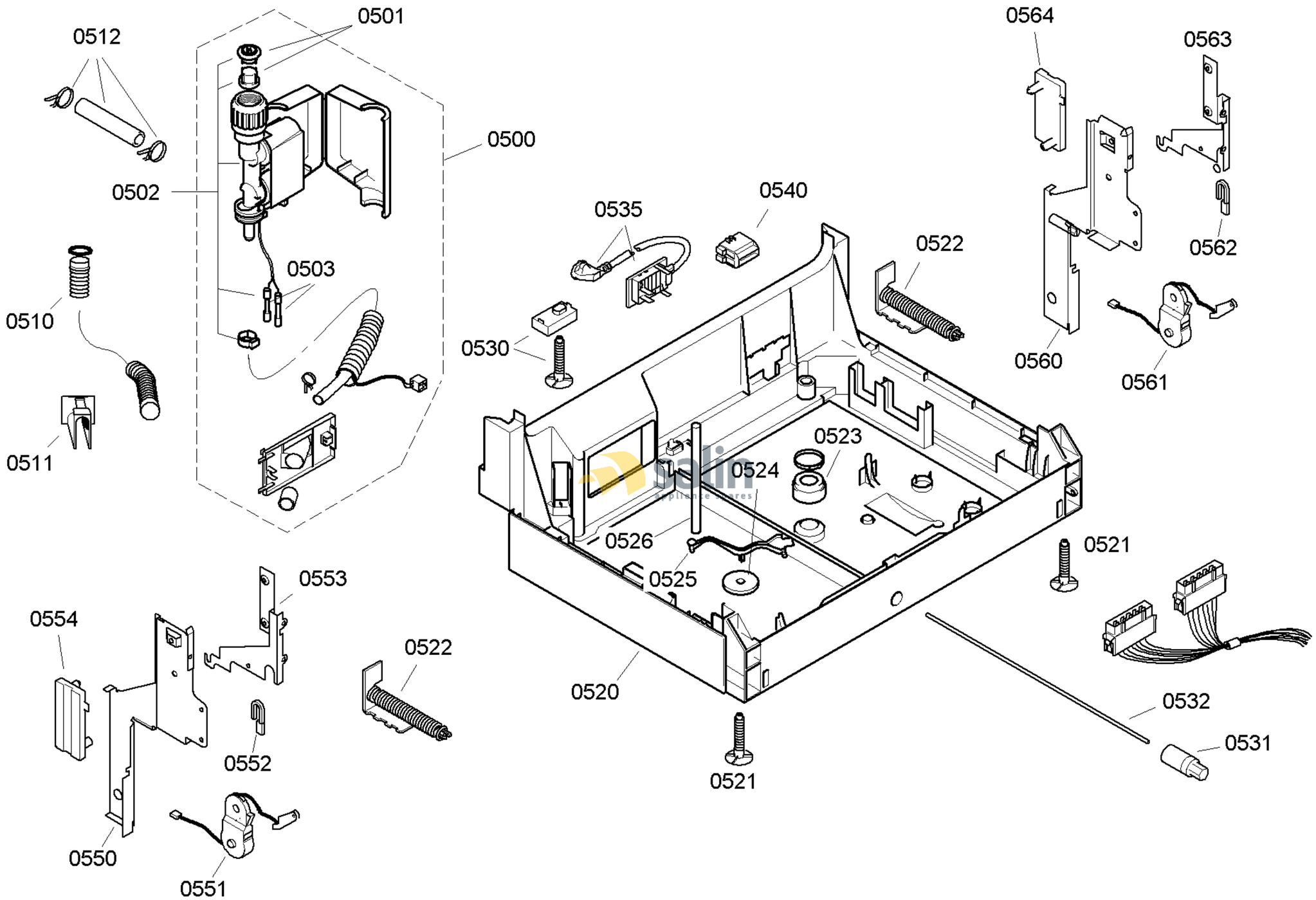

58300000108648 aet 000 b 5/6

FAMILY : SGI57M25EU
MODEL NO: SGI57M25EU/32
Check Position No/Part No or Replacement No

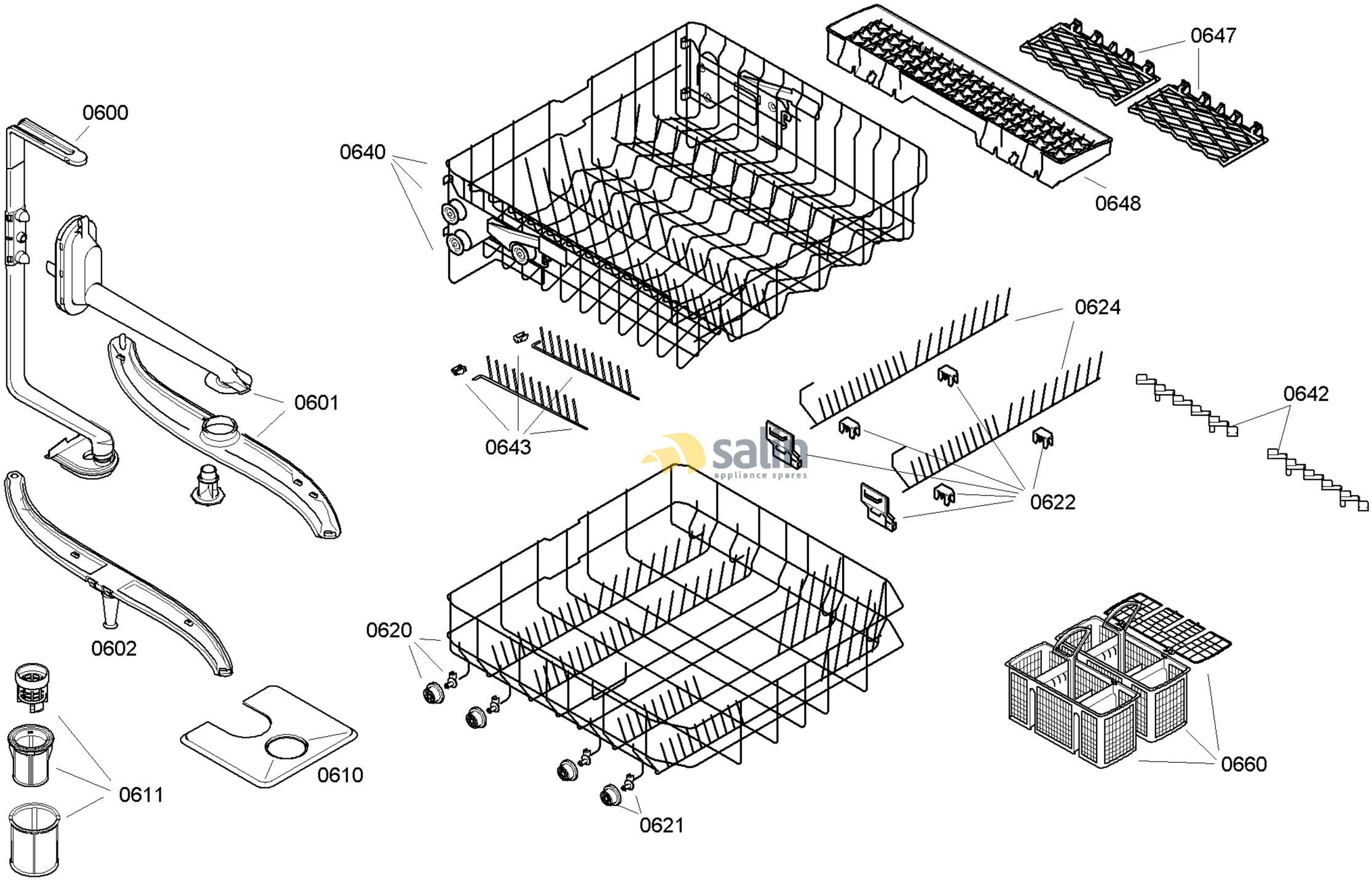

58300000108648 aet 000 b 6/6

FAMILY : SGI57M25EU
MODEL NO: SGI57M25EU/32
Check Position No/Part No or Replacement No