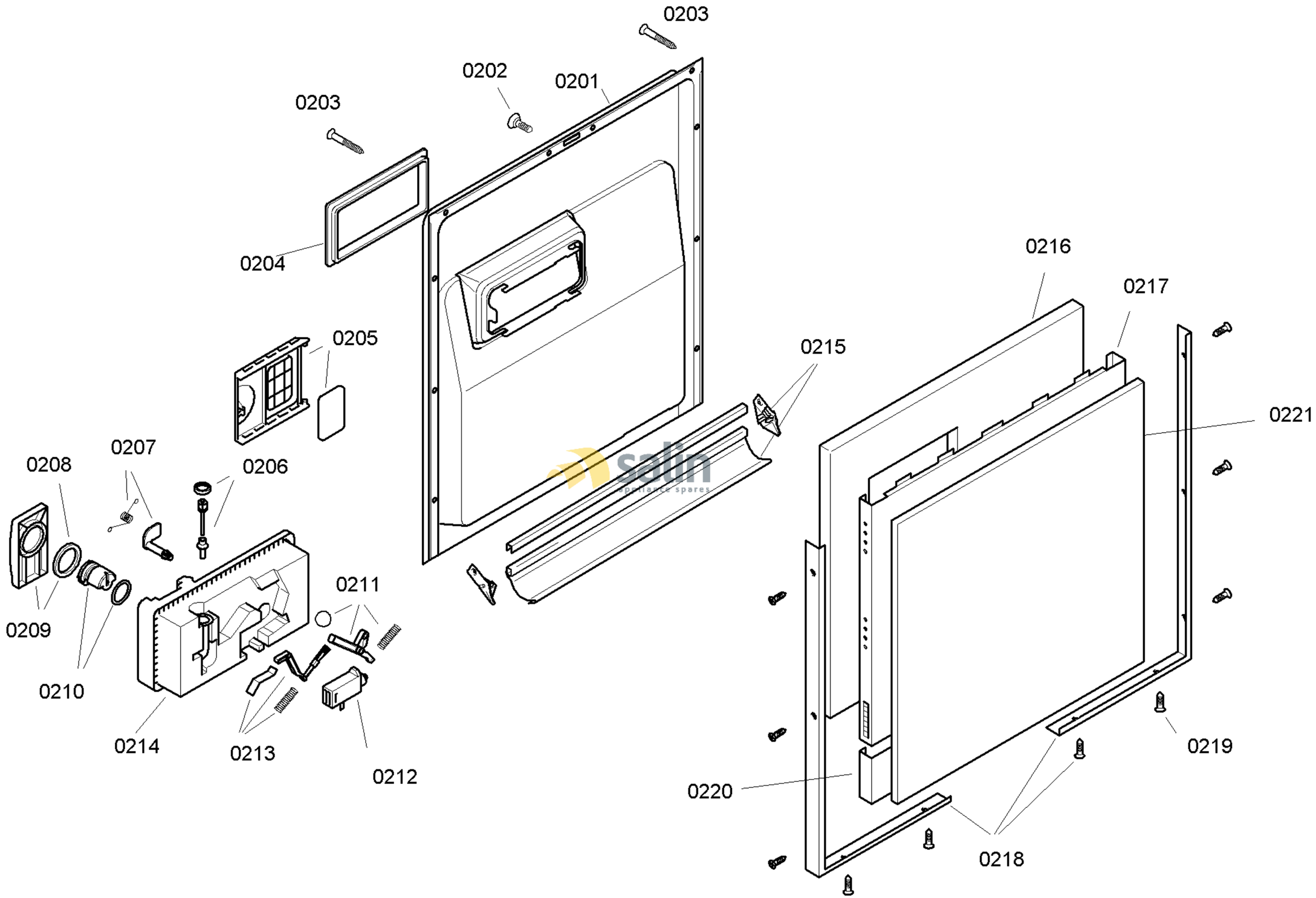

58300000130791 aet 000 a 2/6

FAMILY : SGU45E16II
MODEL NO: SGU45E16II/90
Check Position No/Part No or Replacement No

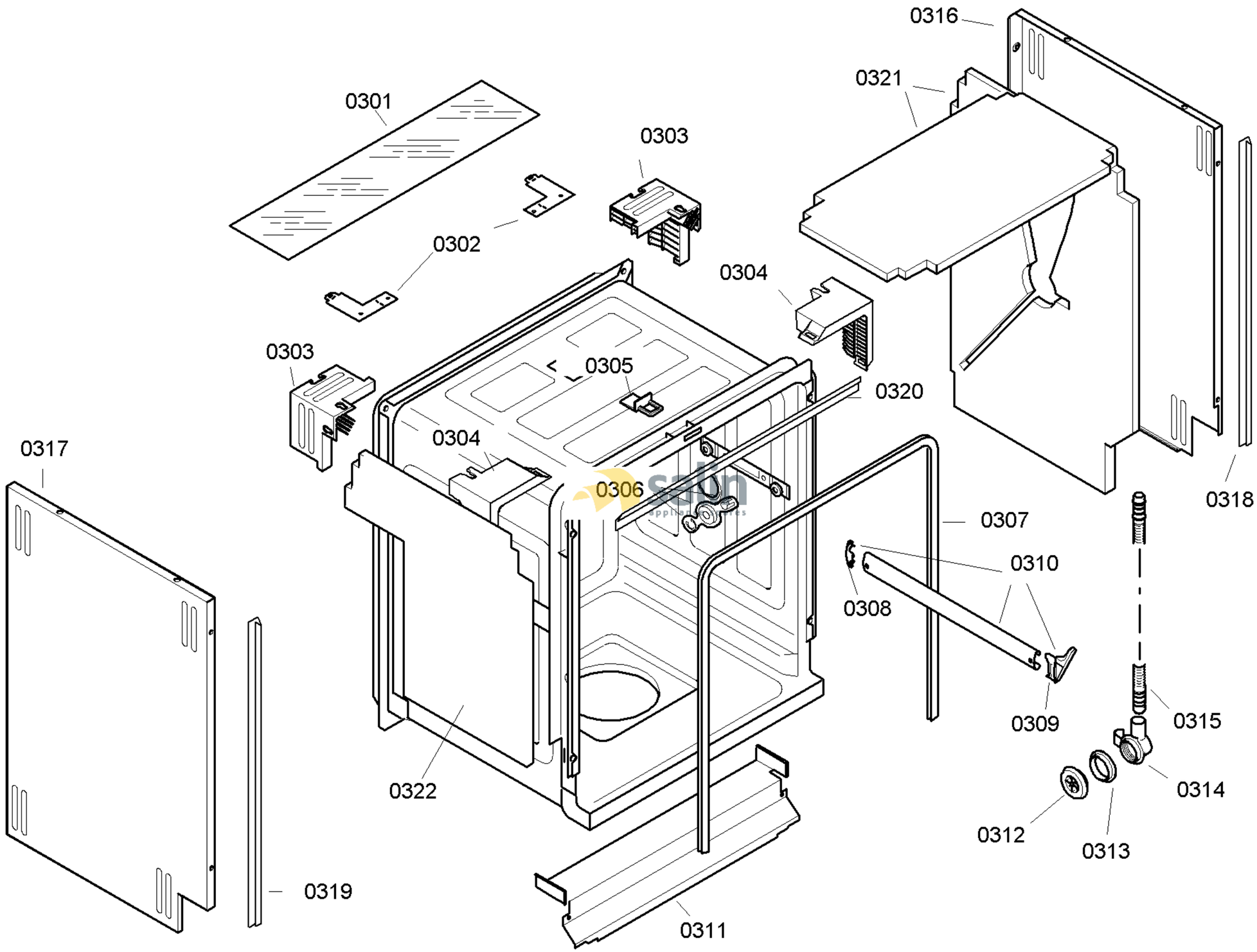

58300000130791 aet 000 a 3/6

FAMILY : SGU45E16II
MODEL NO: SGU45E16II/90
Check Position No/Part No or Replacement No

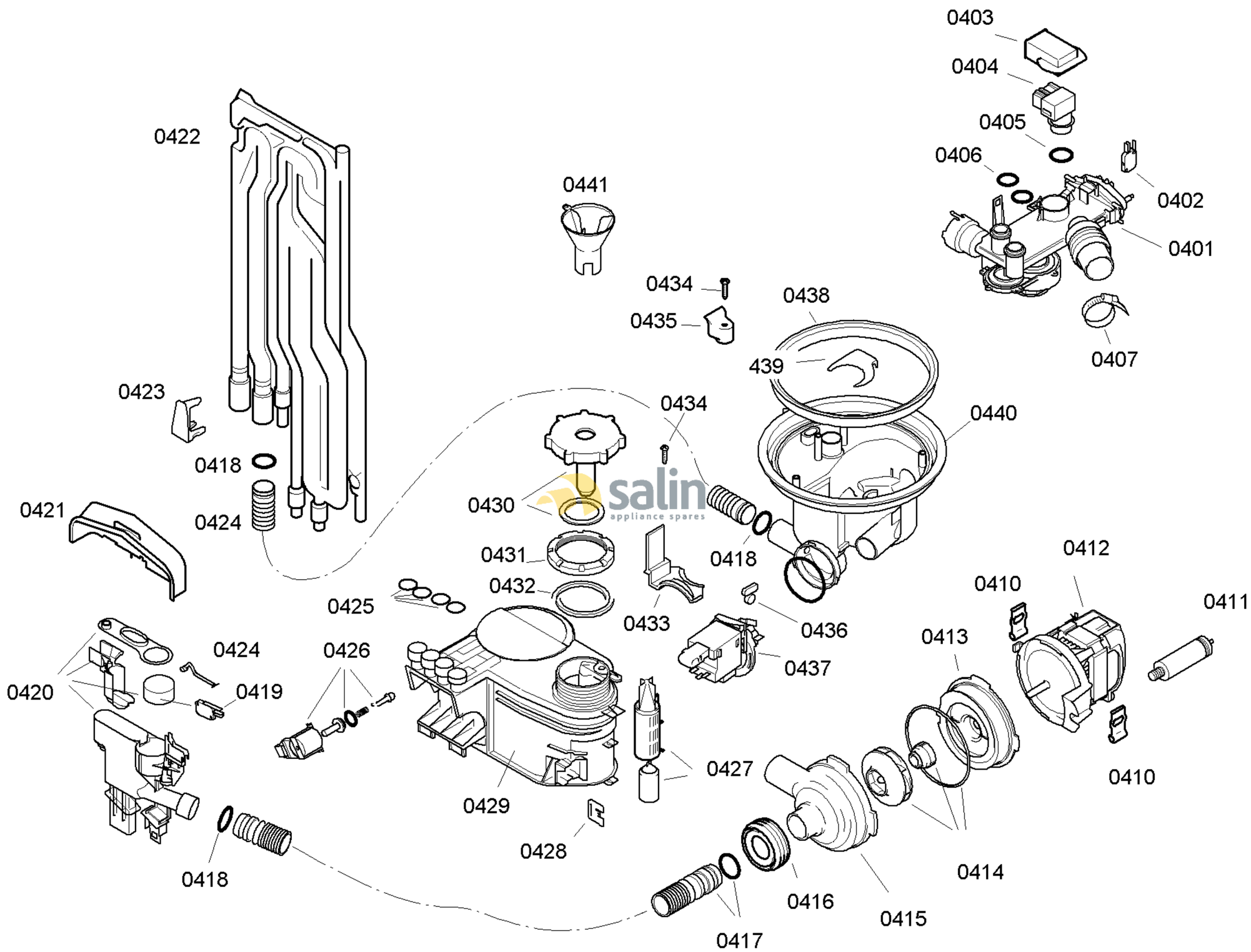

58300000130791 aet 000 a 4/6

FAMILY : SGU45E16II
MODEL NO: SGU45E16II/90
Check Position No/Part No or Replacement No

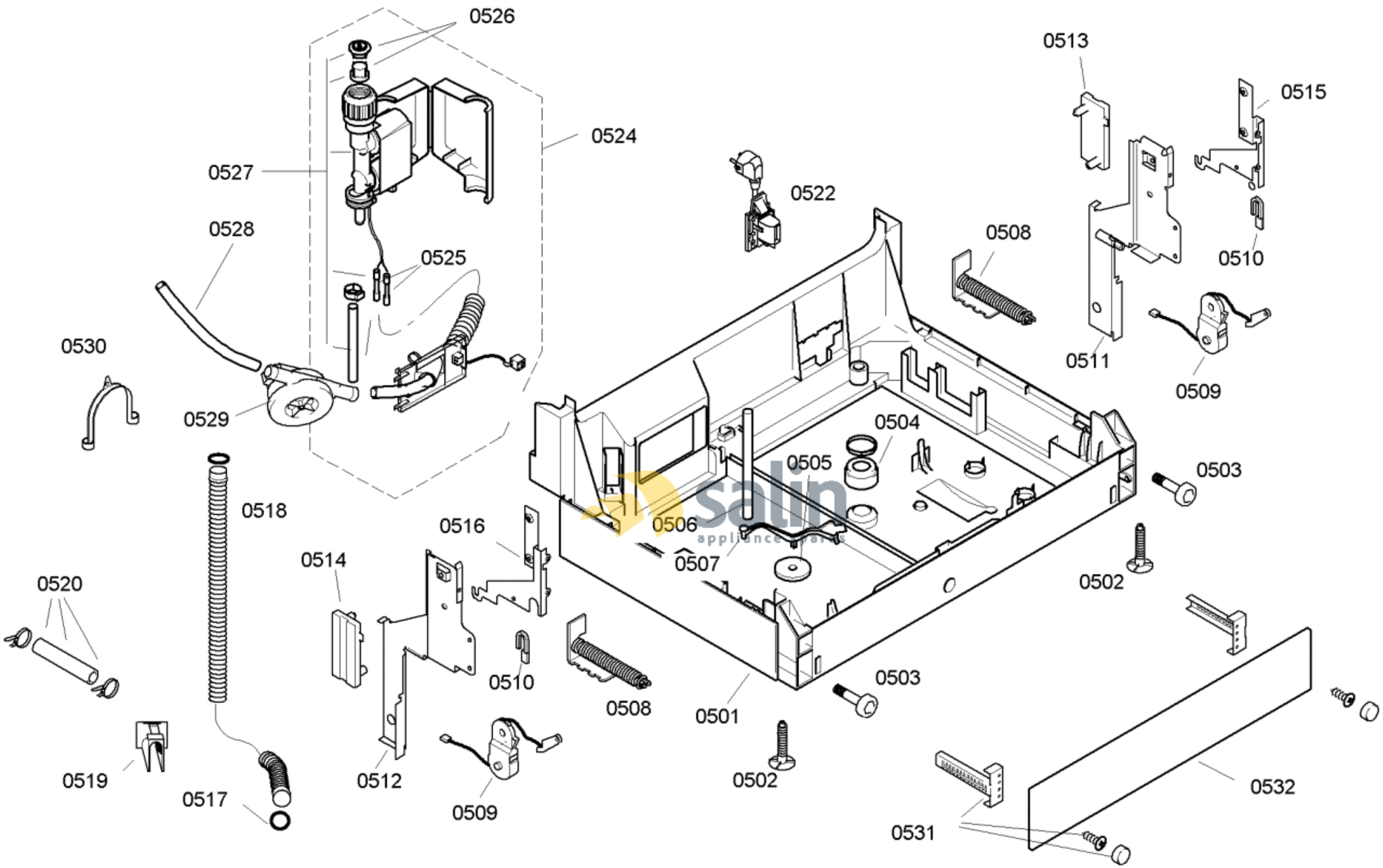

58300000130791 aet 000 a 5/6

FAMILY : SGU45E16II

MODEL NO: SGU45E16II/90

Check Position No/Part No or Replacement No

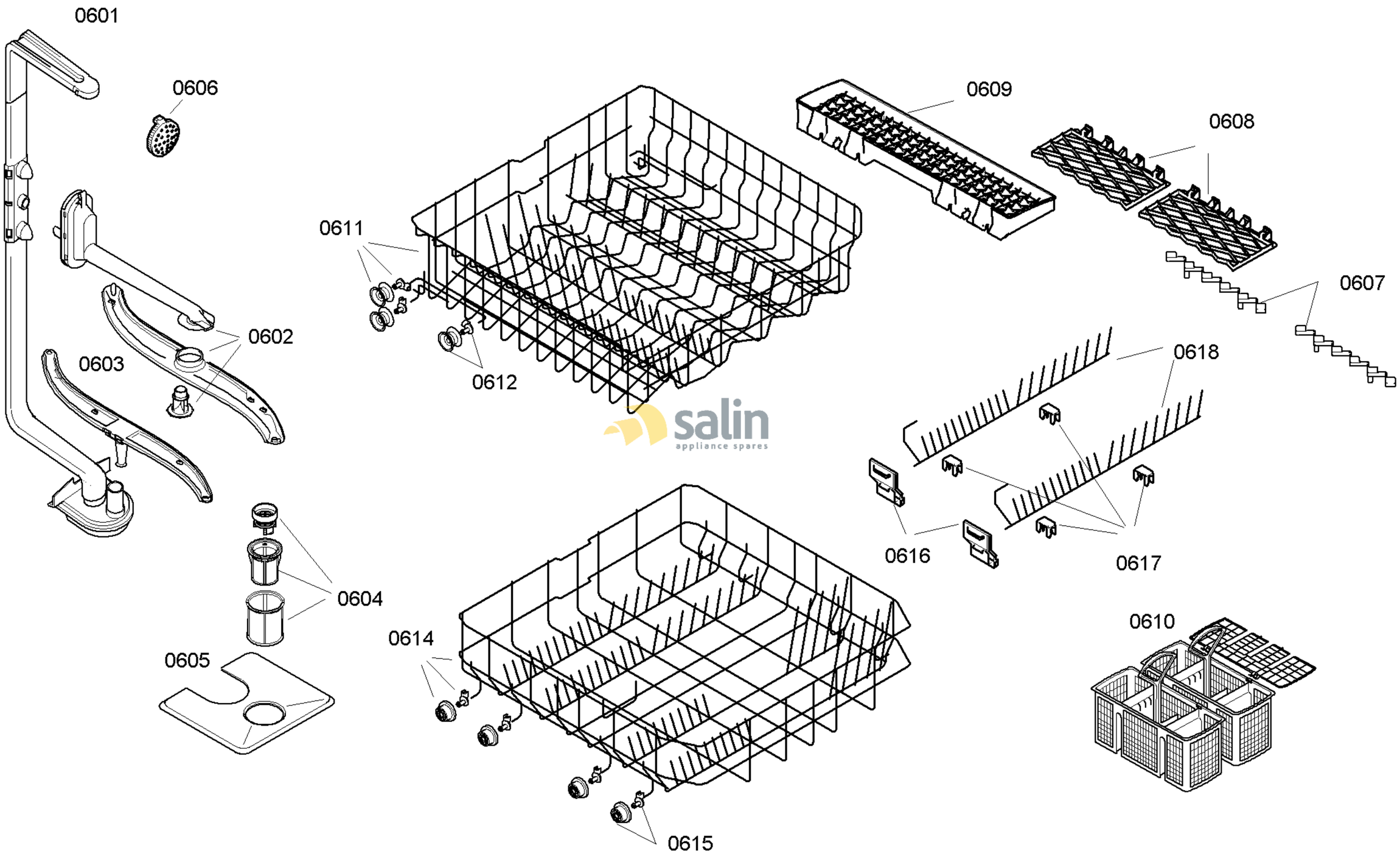

58300000130791 aet 000 a 6/6

FAMILY : SGU45E16II
MODEL NO: SGU45E16II/90
Check Position No/Part No or Replacement No