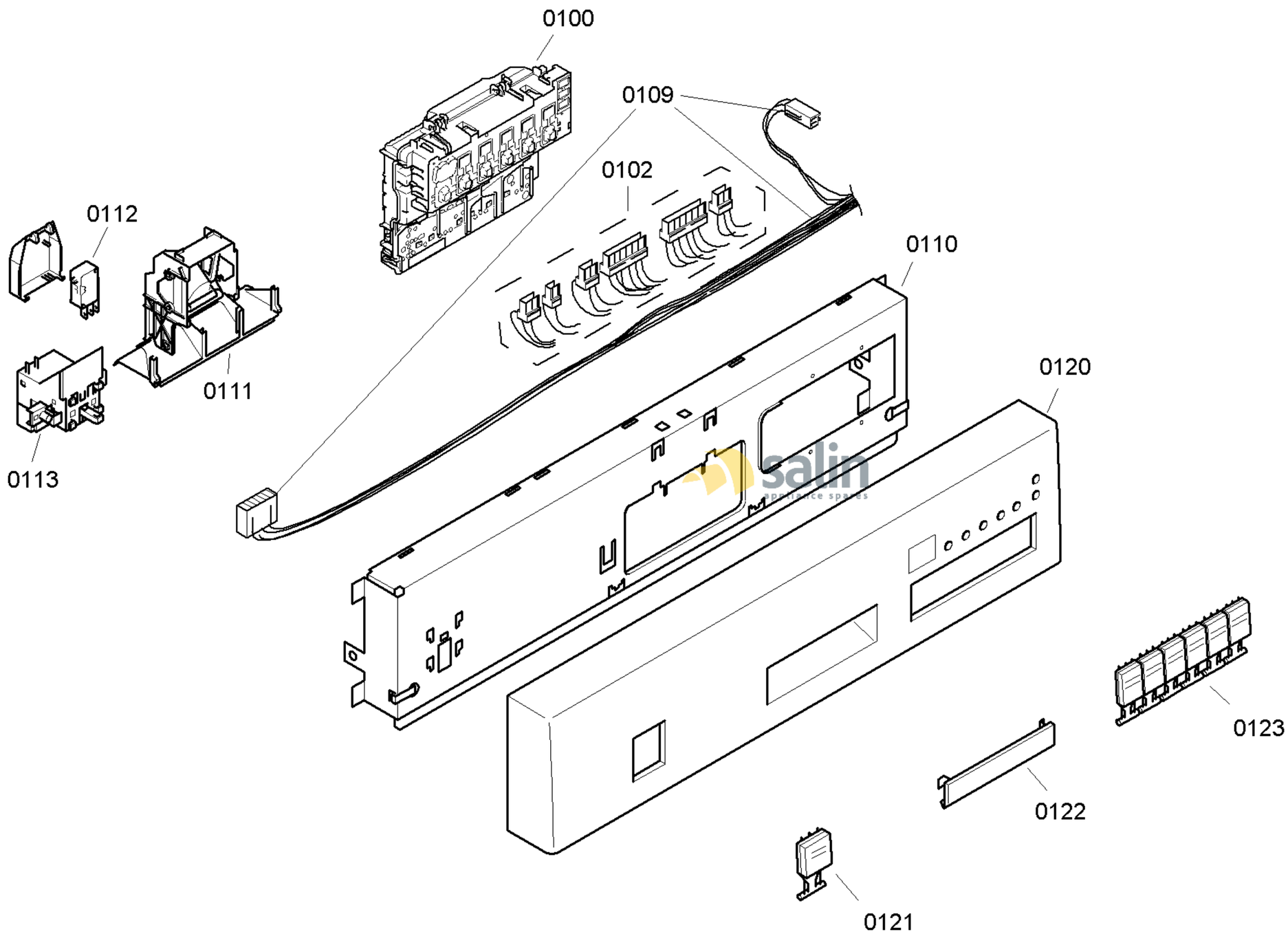

58300000105511 aet 000 d 1/6

FAMILY : SRS45T22EU
MODEL NO: SRS45T22EU/23
Check Position No/Part No or Replacement No

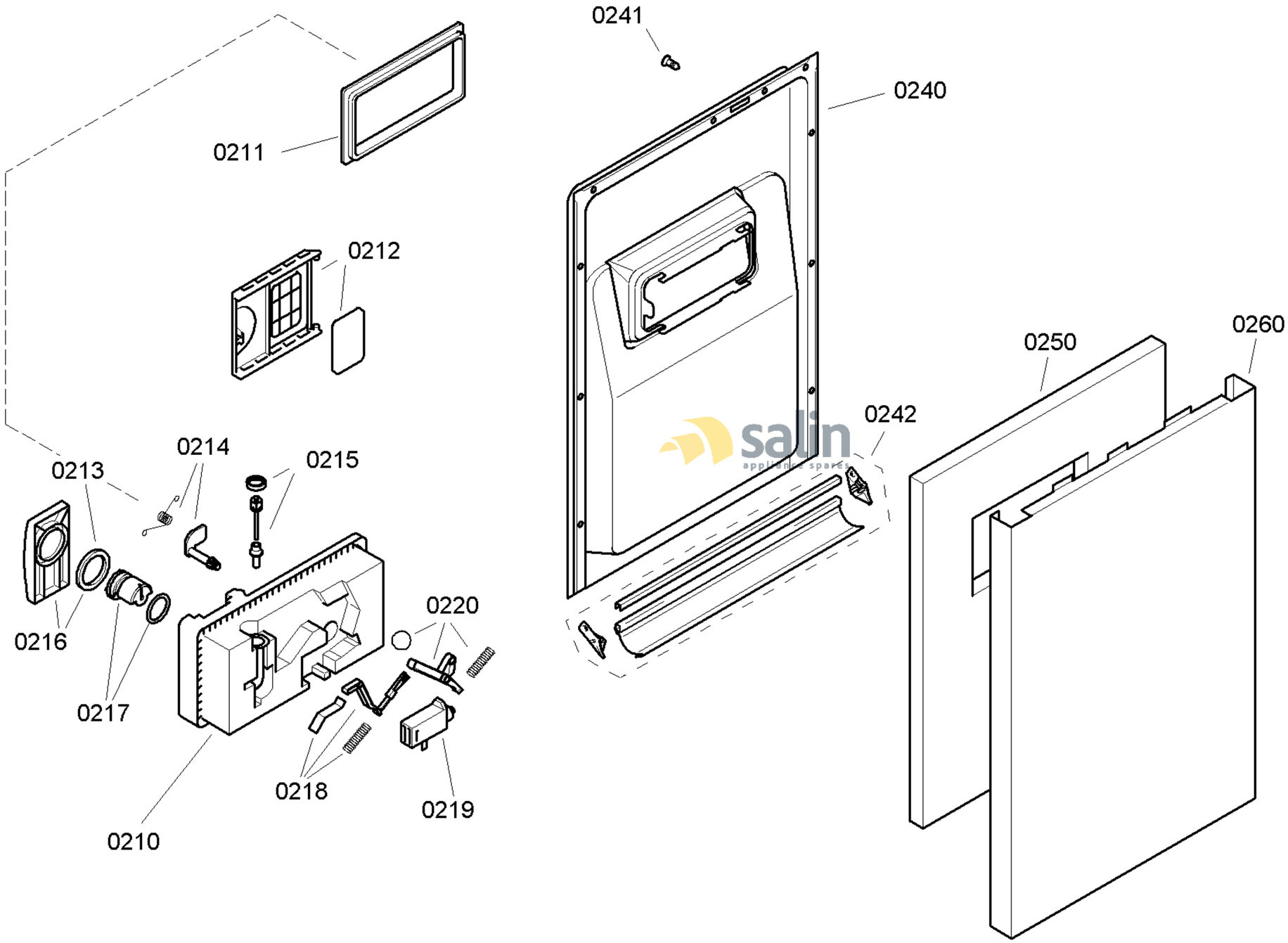

58300000105511 aet 000 d 2/6

FAMILY : SRS45T22EU
MODEL NO: SRS45T22EU/23
Check Position No/Part No or Replacement No

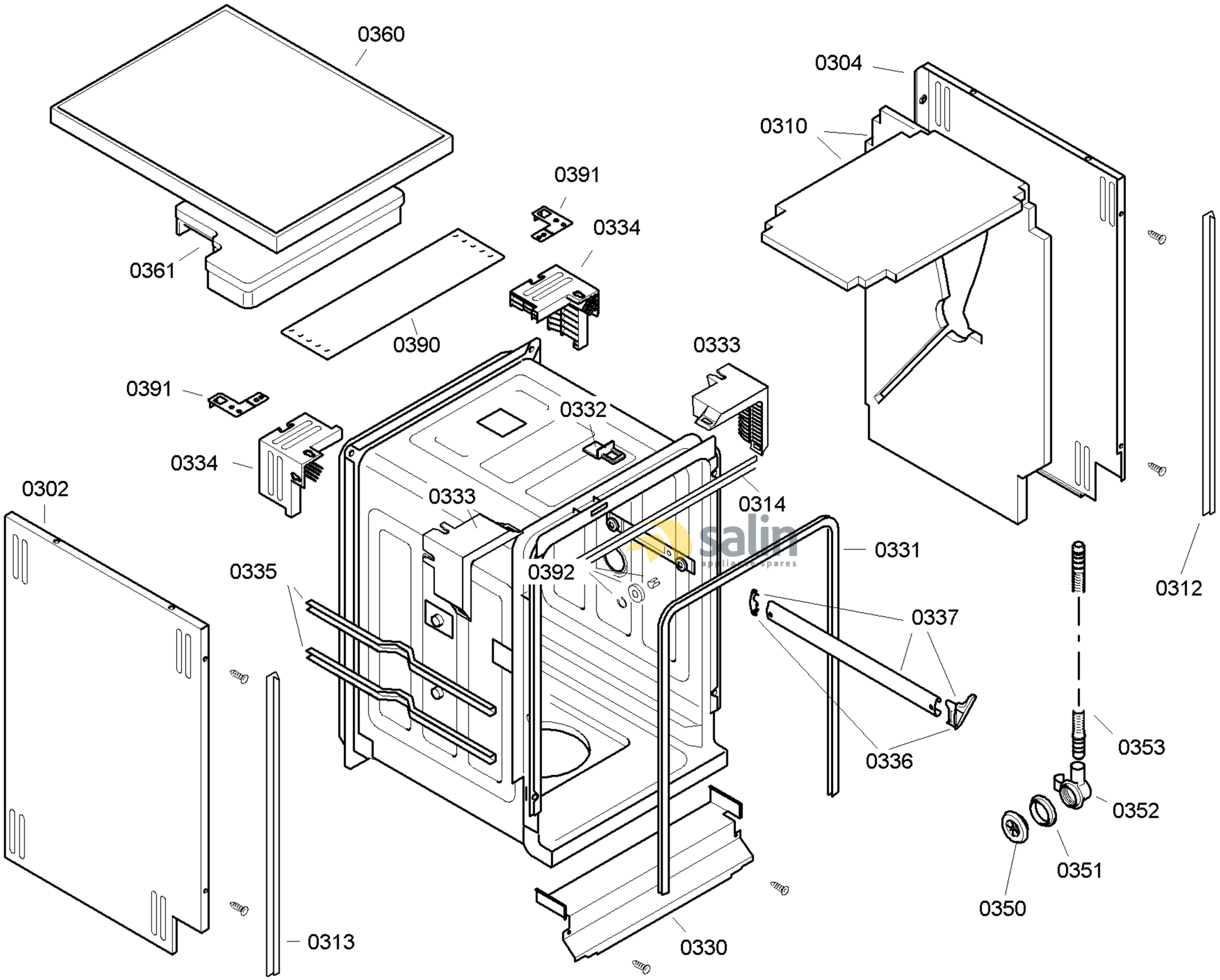

58300000105511 aet 000 d 3/6

FAMILY : SRS45T22EU
MODEL NO: SRS45T22EU/23
Check Position No/Part No or Replacement No

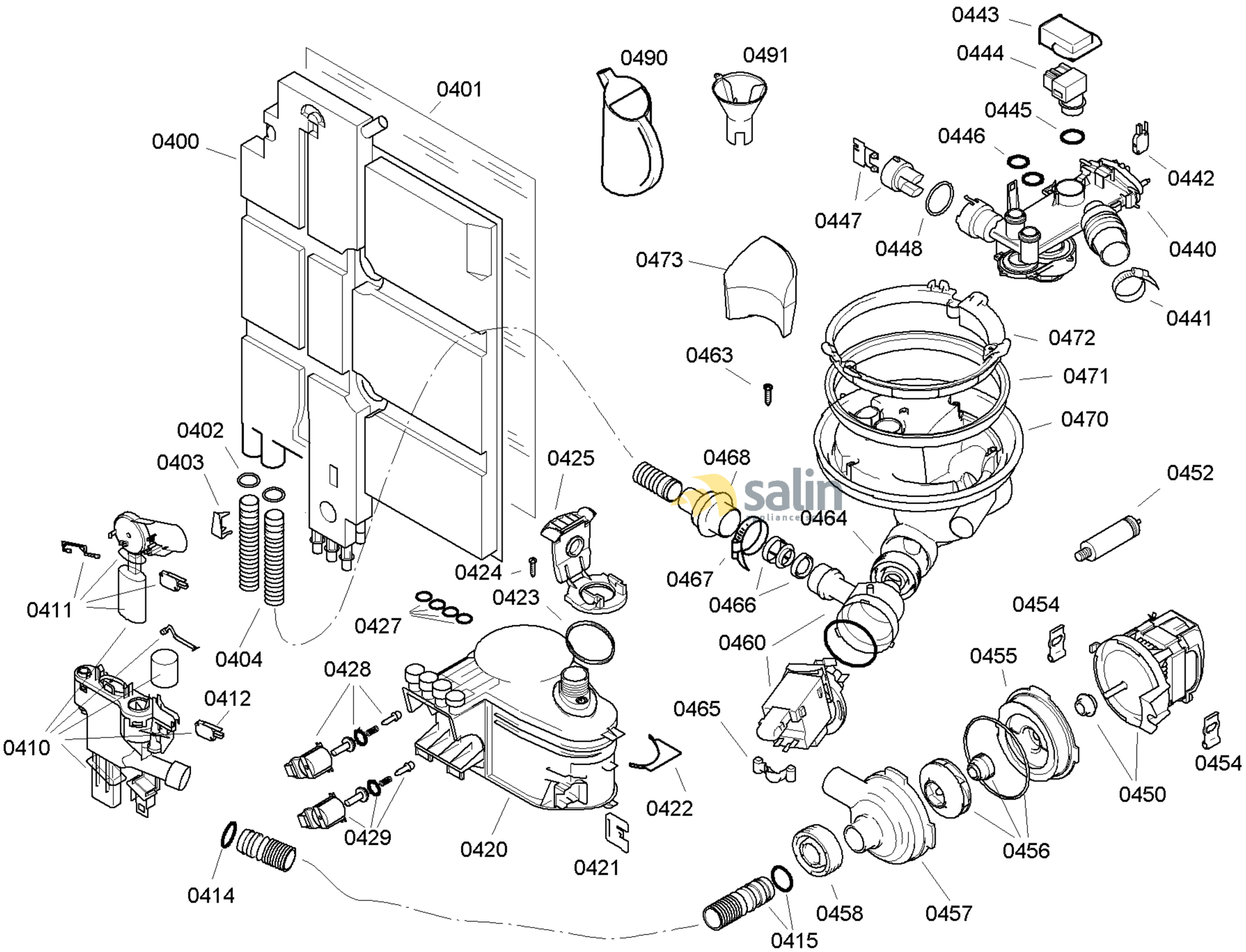

58300000105511 aet 000 d 4/6

FAMILY : SRS45T22EU
MODEL NO: SRS45T22EU/23
Check Position No/Part No or Replacement No

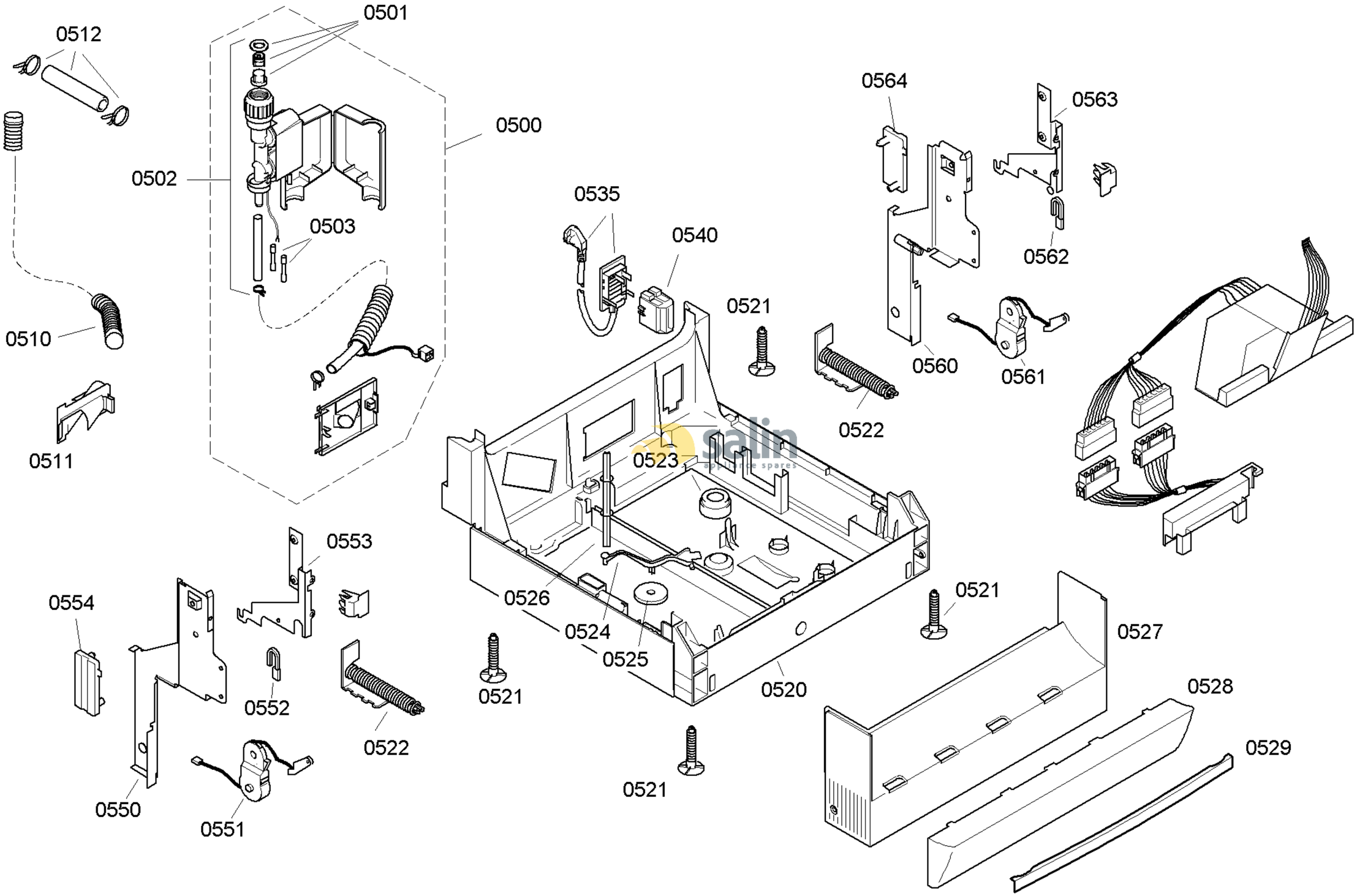

58300000105511 aet 000 d 5/6

FAMILY : SRS45T22EU
MODEL NO: SRS45T22EU/23
Check Position No/Part No or Replacement No

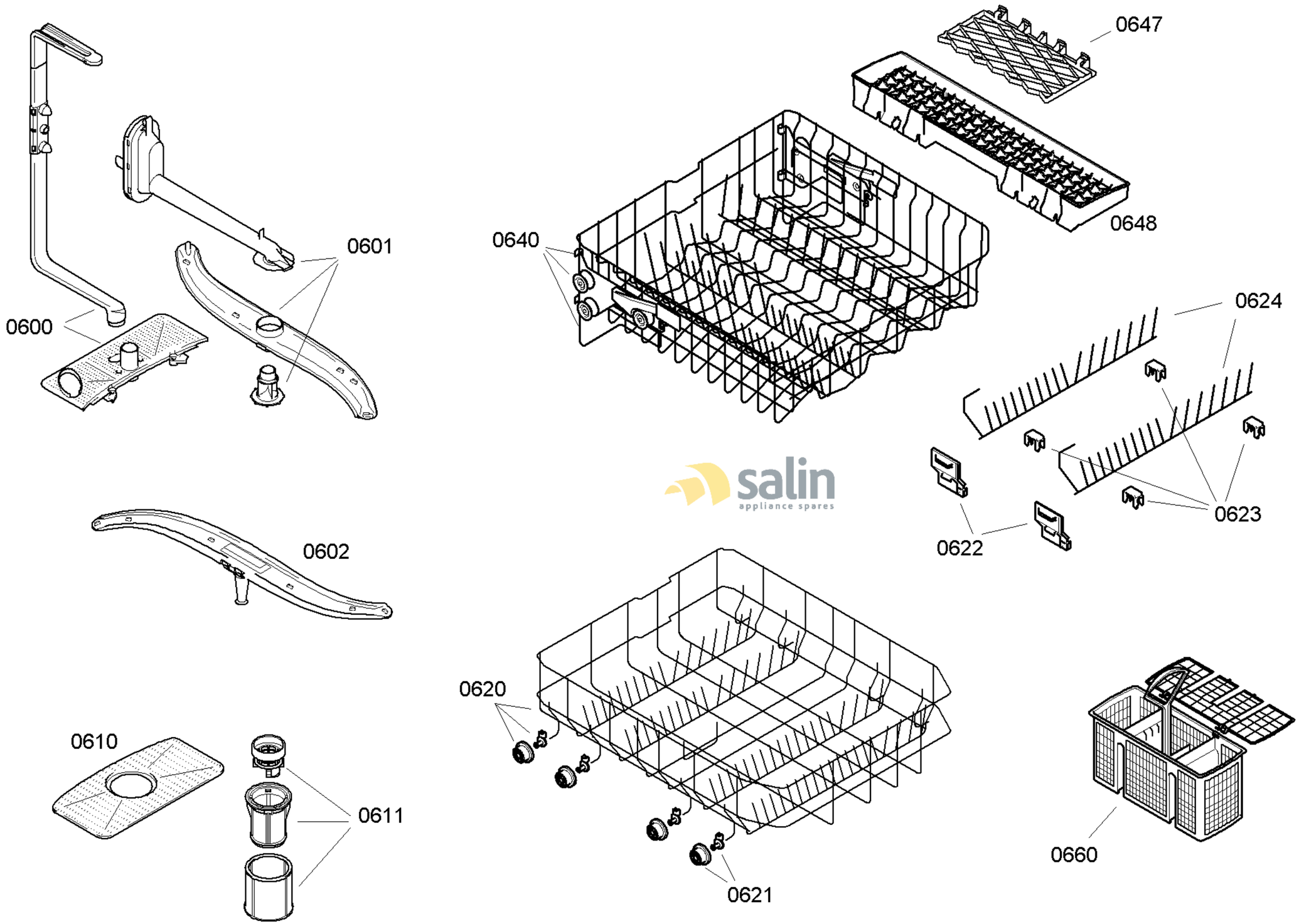

salin
appliance spares

58300000105511 aet 000 d 6/6

FAMILY : SRS45T22EU
MODEL NO: SRS45T22EU/23
Check Position No/Part No or Replacement No