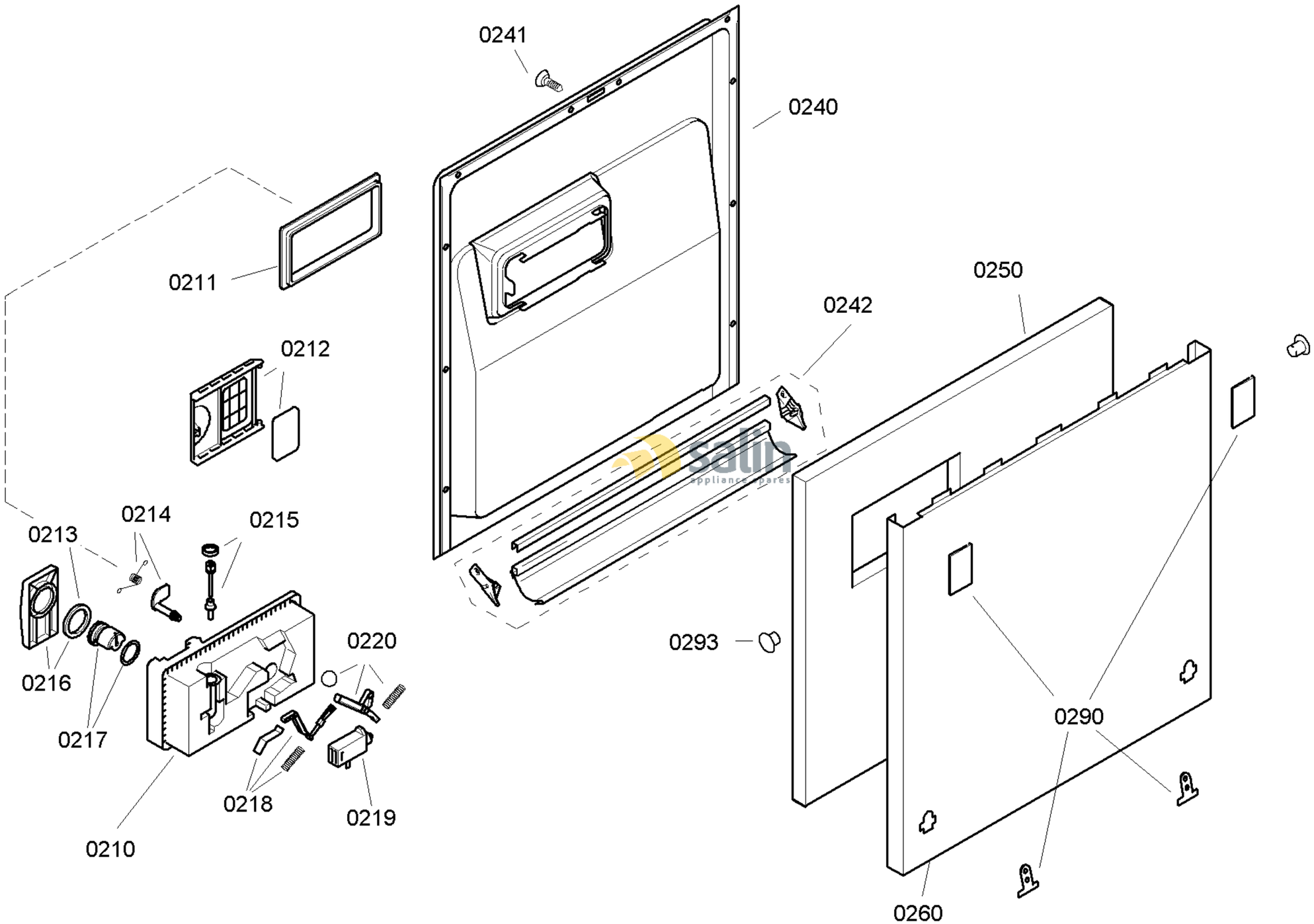

58300000119083 aet 000 b 2/6

FAMILY : SGI45M76EU
MODEL NO: SGI45M76EU/86
Check Position No/Part No or Replacement No

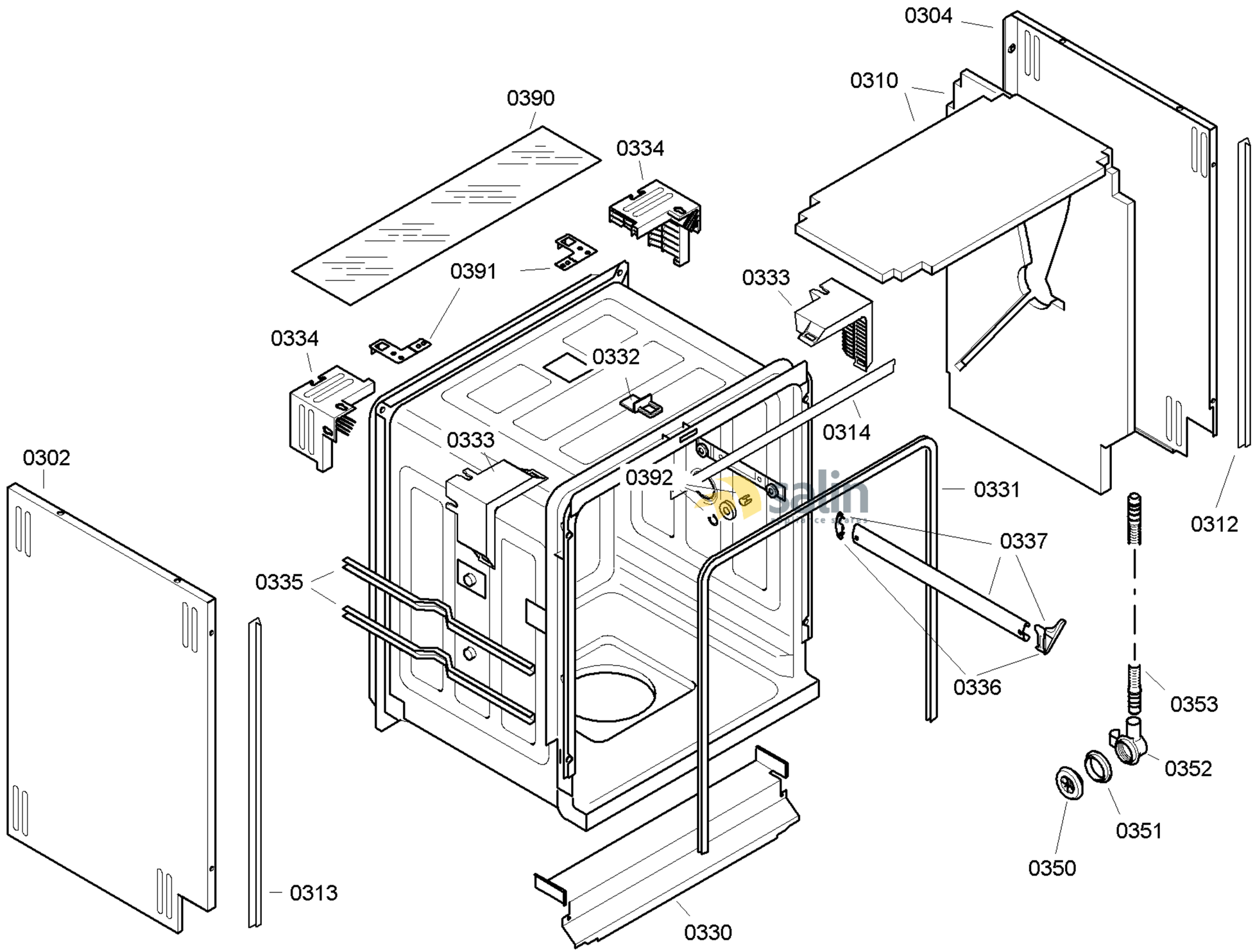

58300000119083 aet 000 b 3/6

FAMILY : SGI45M76EU
MODEL NO: SGI45M76EU/86
Check Position No/Part No or Replacement No

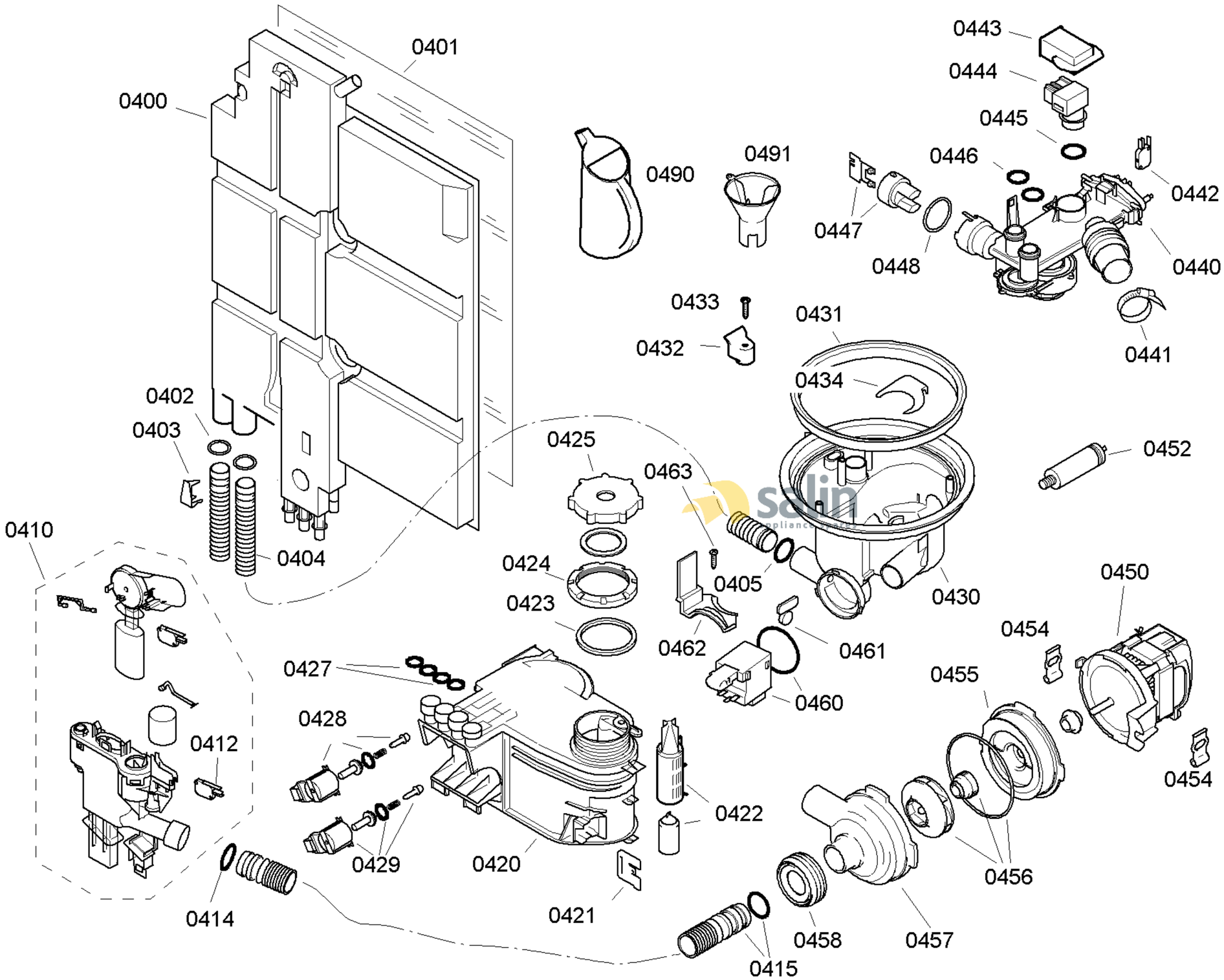

58300000119083 aet 000 b 4/6

FAMILY : SGI45M76EU
MODEL NO: SGI45M76EU/86
Check Position No/Part No or Replacement No

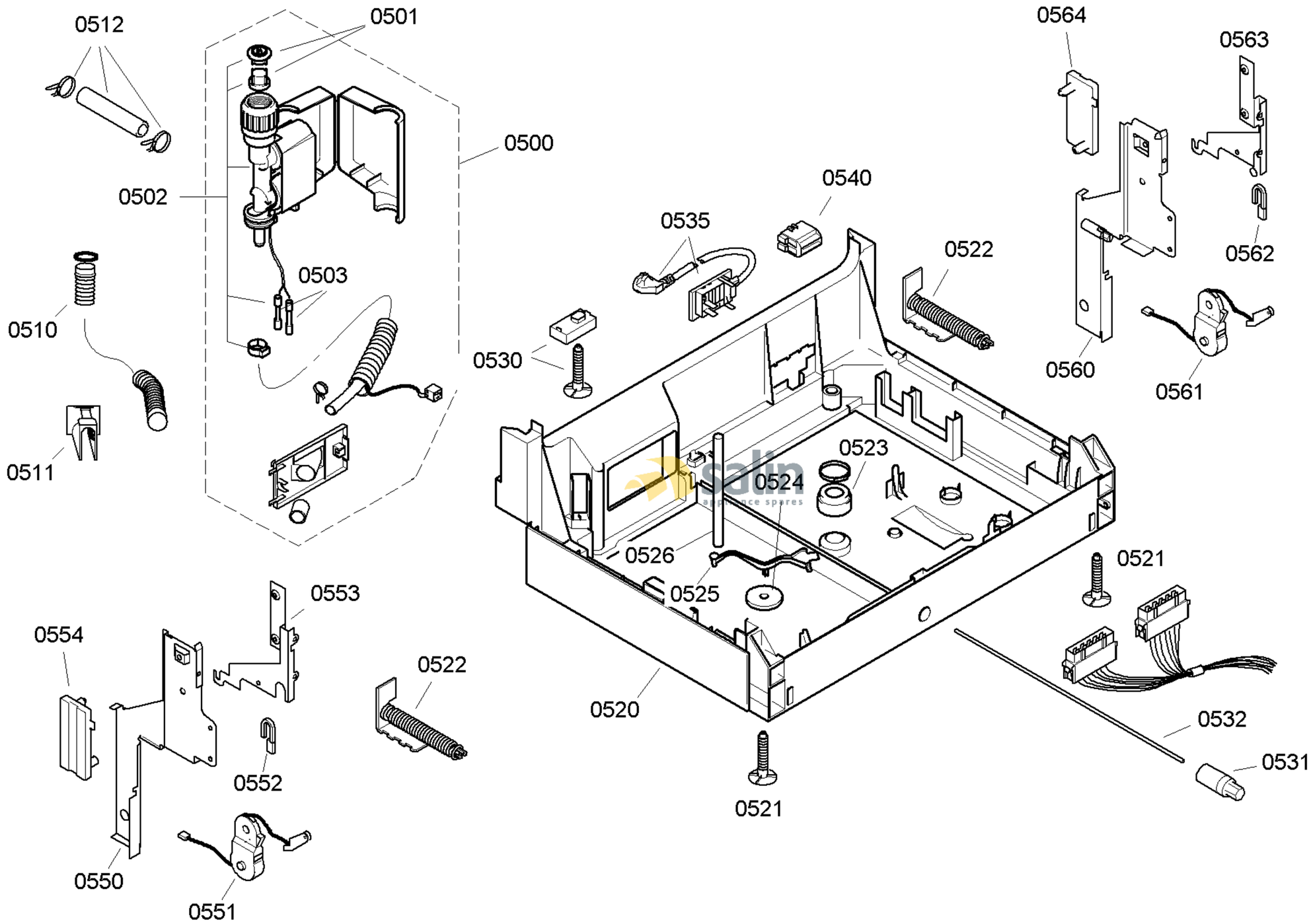

58300000119083 aet 000 b 5/6

FAMILY : SGI45M76EU
MODEL NO: SGI45M76EU/86
Check Position No/Part No or Replacement No

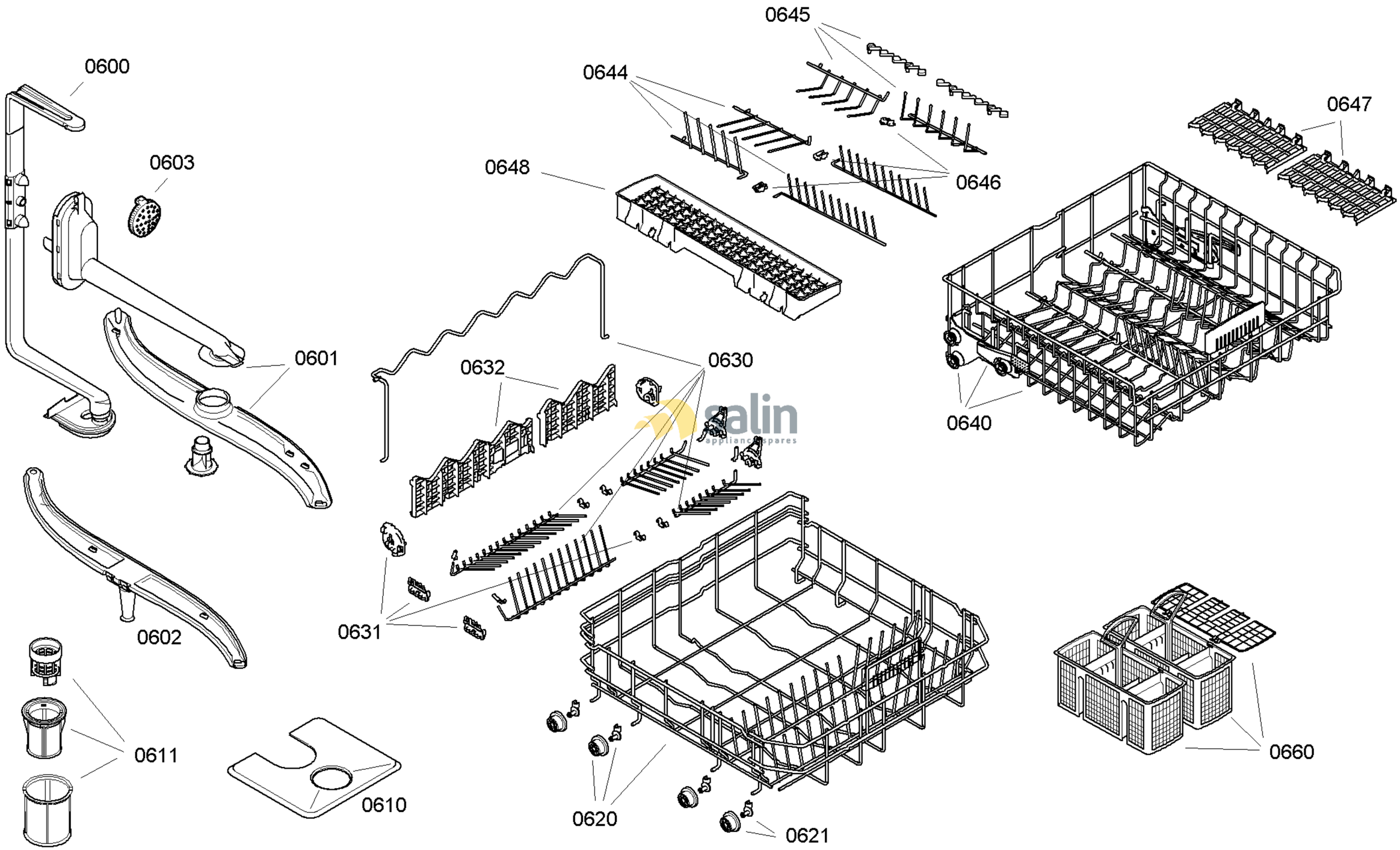

58300000119083 aet 000 b 6/6

FAMILY : SGI45M76EU
MODEL NO: SGI45M76EU/86
Check Position No/Part No or Replacement No