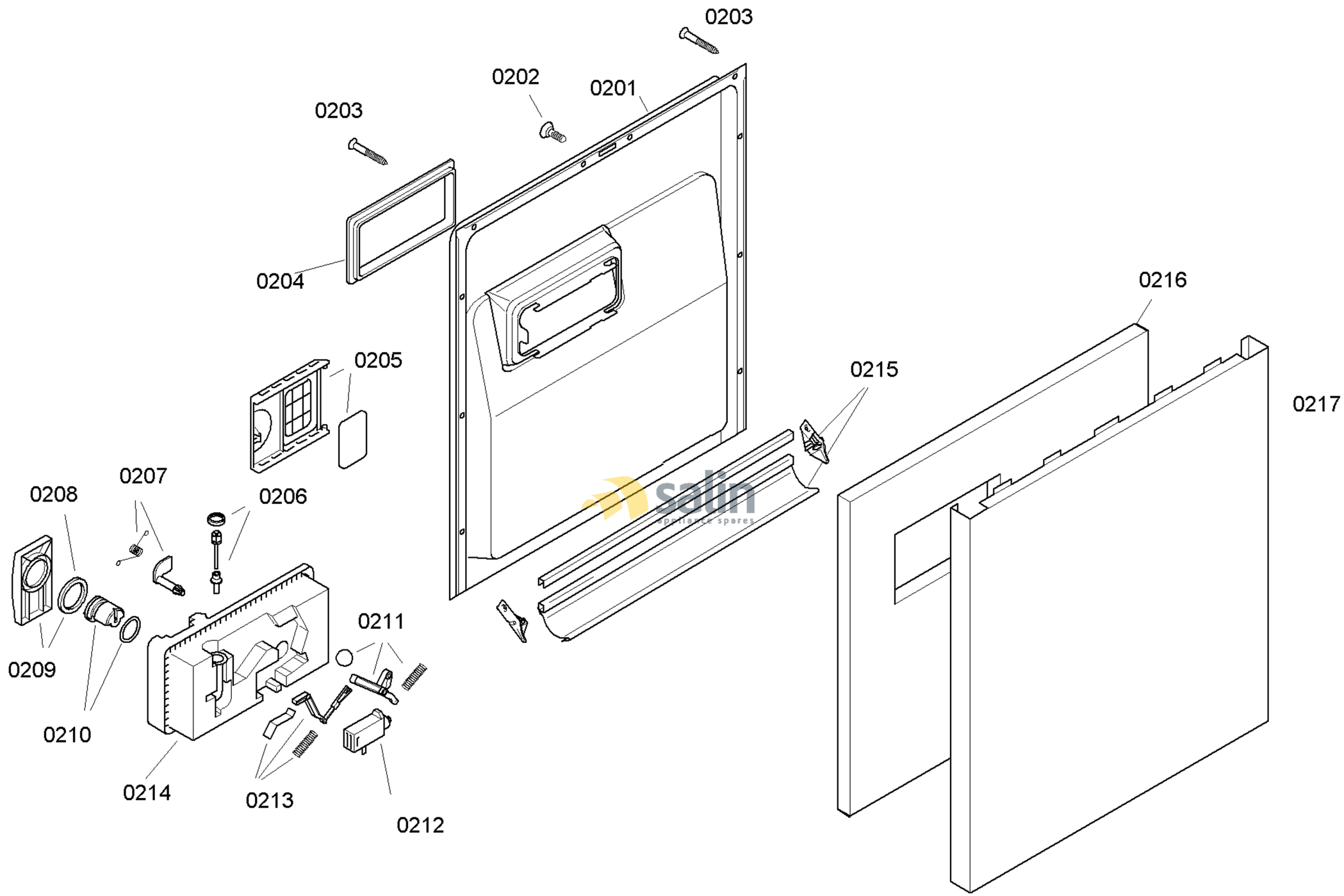

58300000130696 aet 000 a 2/6

FAMILY : SGU45M45EP
MODEL NO: SGU45M45EP/90
Check Position No/Part No or Replacement No

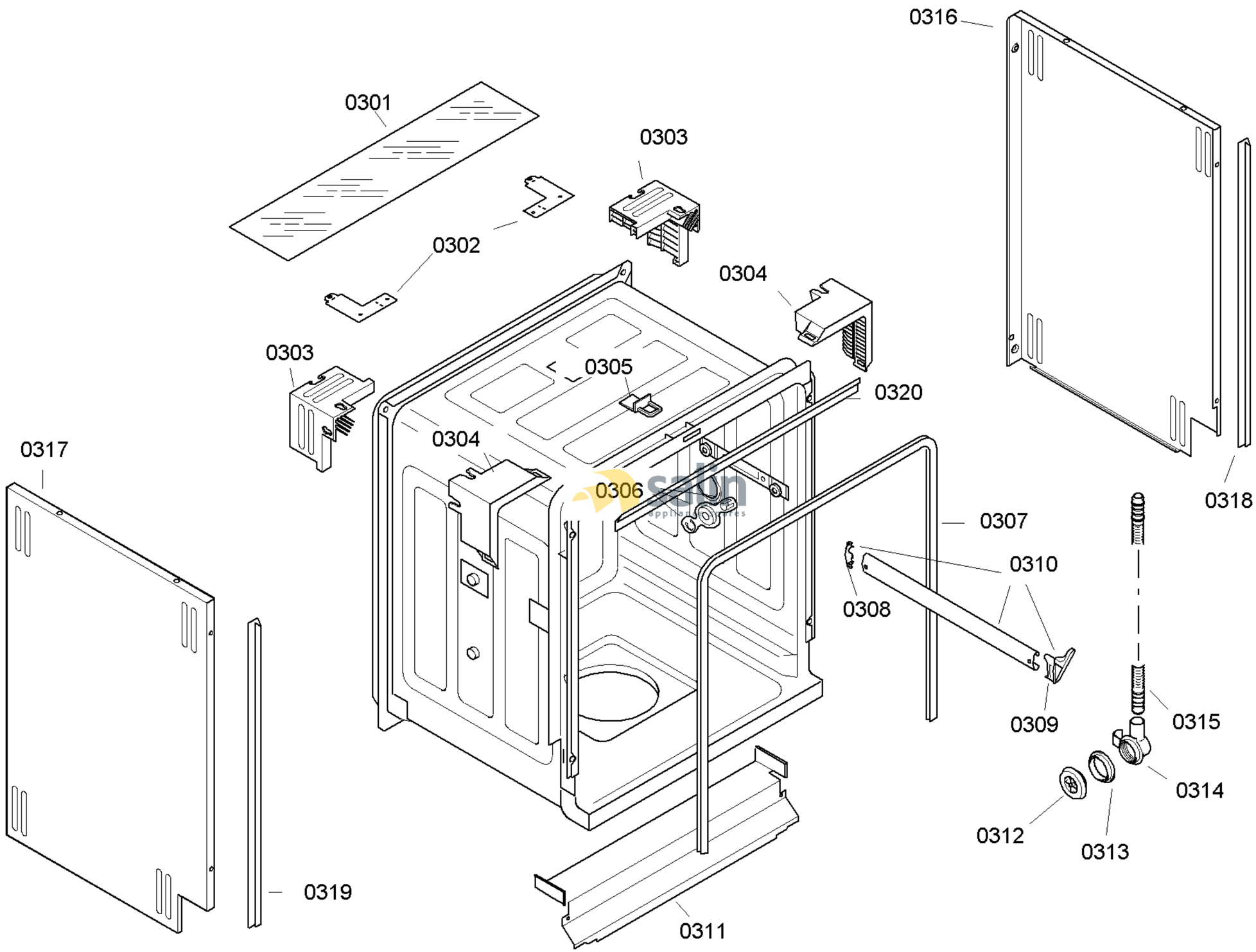

58300000130696 aet 000 a 3/6

FAMILY : SGU45M45EP
MODEL NO: SGU45M45EP/90
Check Position No/Part No or Replacement No

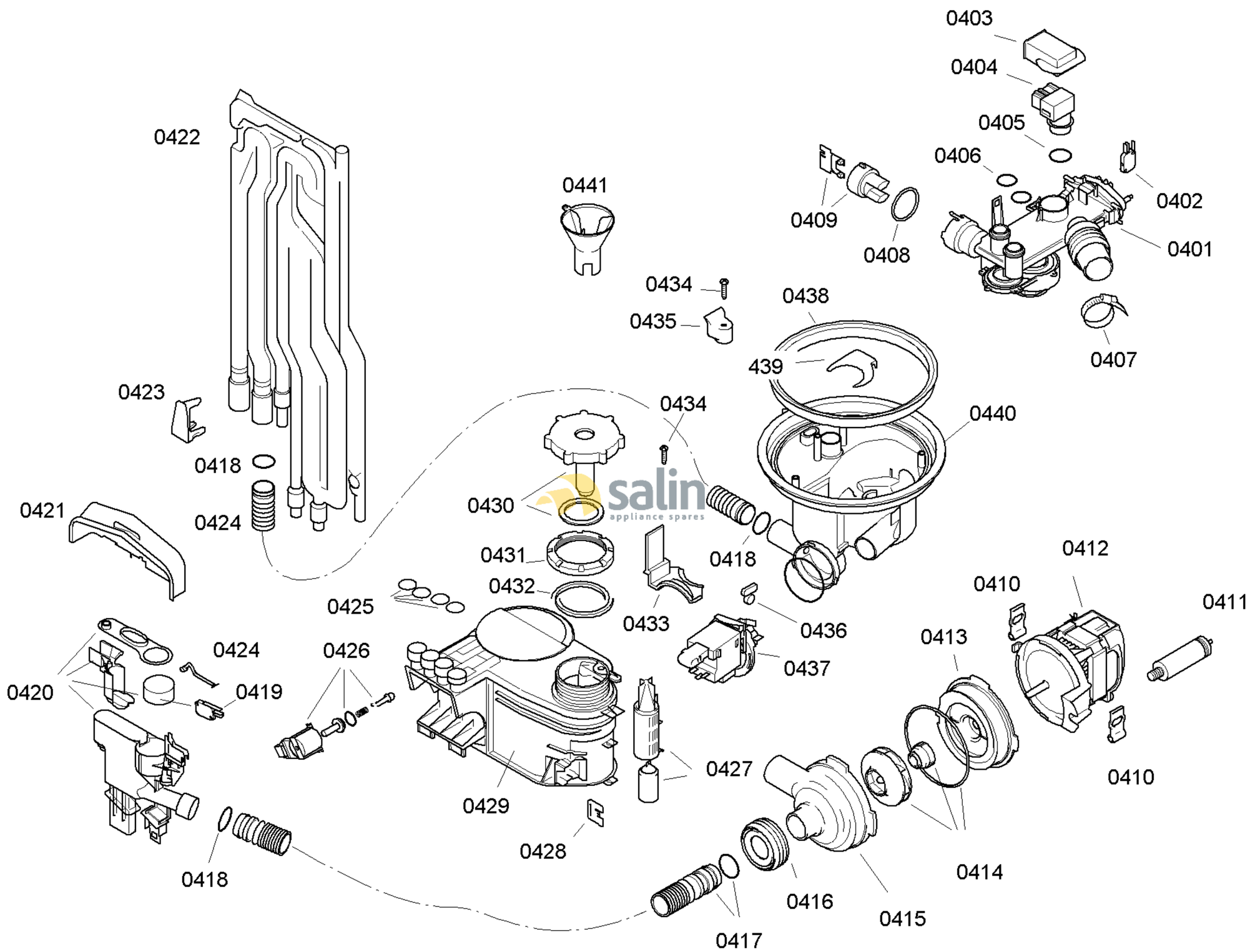

58300000130696 aet 000 a 4/6

FAMILY : SGU45M45EP
MODEL NO: SGU45M45EP/90
Check Position No/Part No or Replacement No

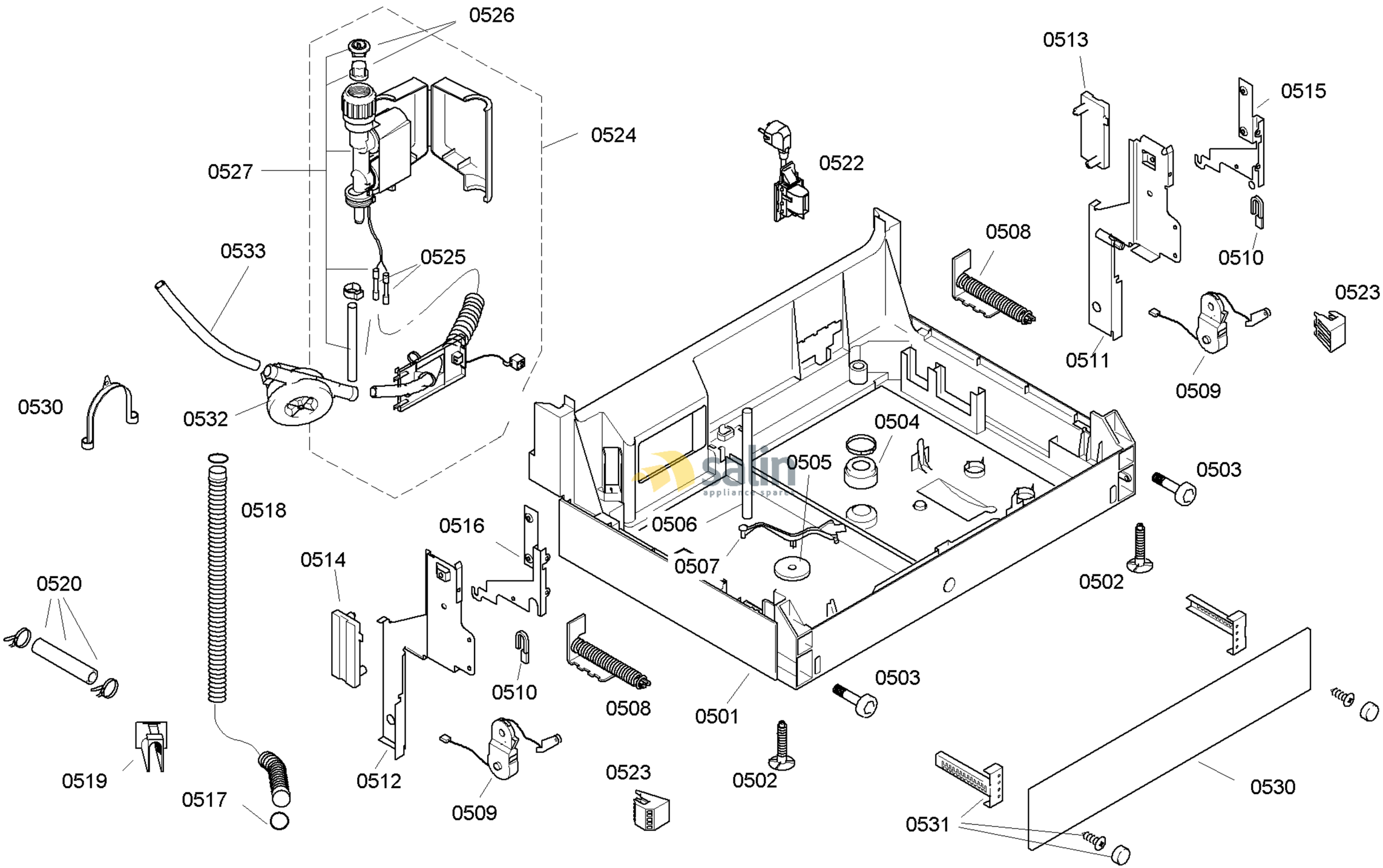

58300000130696 aet 000 a 5/6

FAMILY : SGU45M45EP
MODEL NO: SGU45M45EP/90
Check Position No/Part No or Replacement No

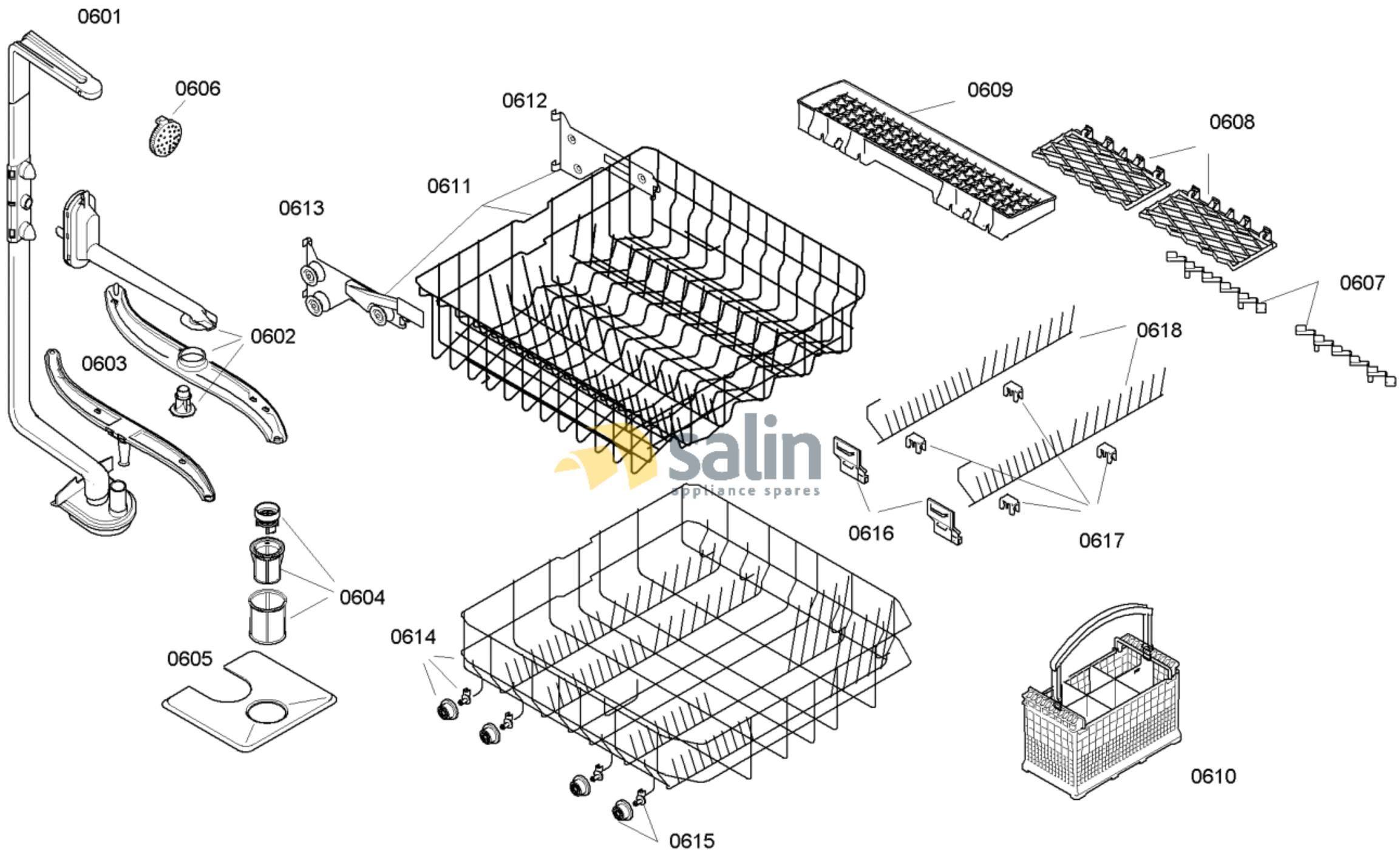

58300000130696 aet 000 a 6/6

FAMILY : SGU45M45EP

MODEL NO: SGU45M45EP/90

Check Position No/Part No or Replacement No