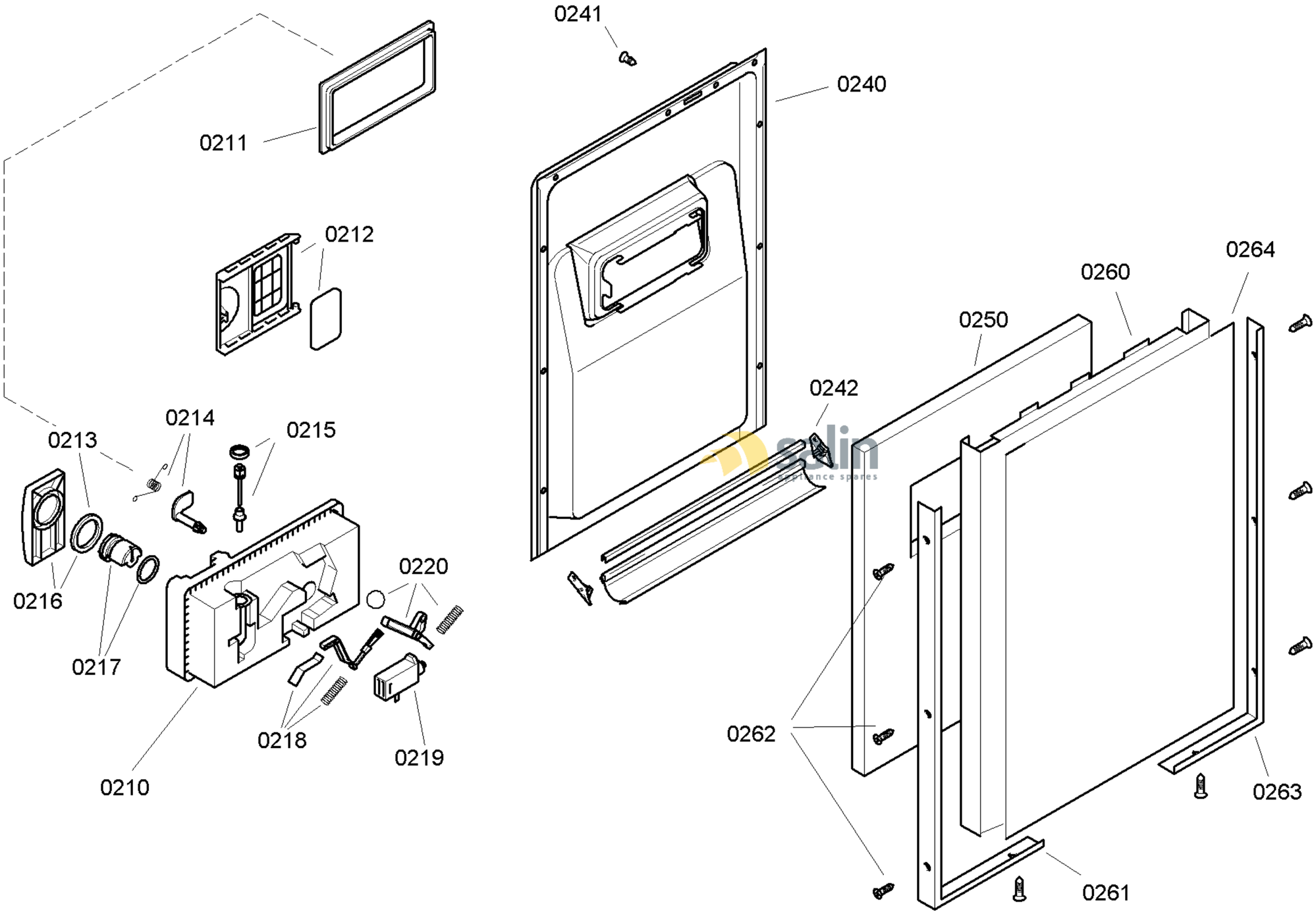

58300000103977 aet 000 b 2/6

FAMILY : SRU55T05EU
MODEL NO: SRU55T05EU/15
Check Position No/Part No or Replacement No

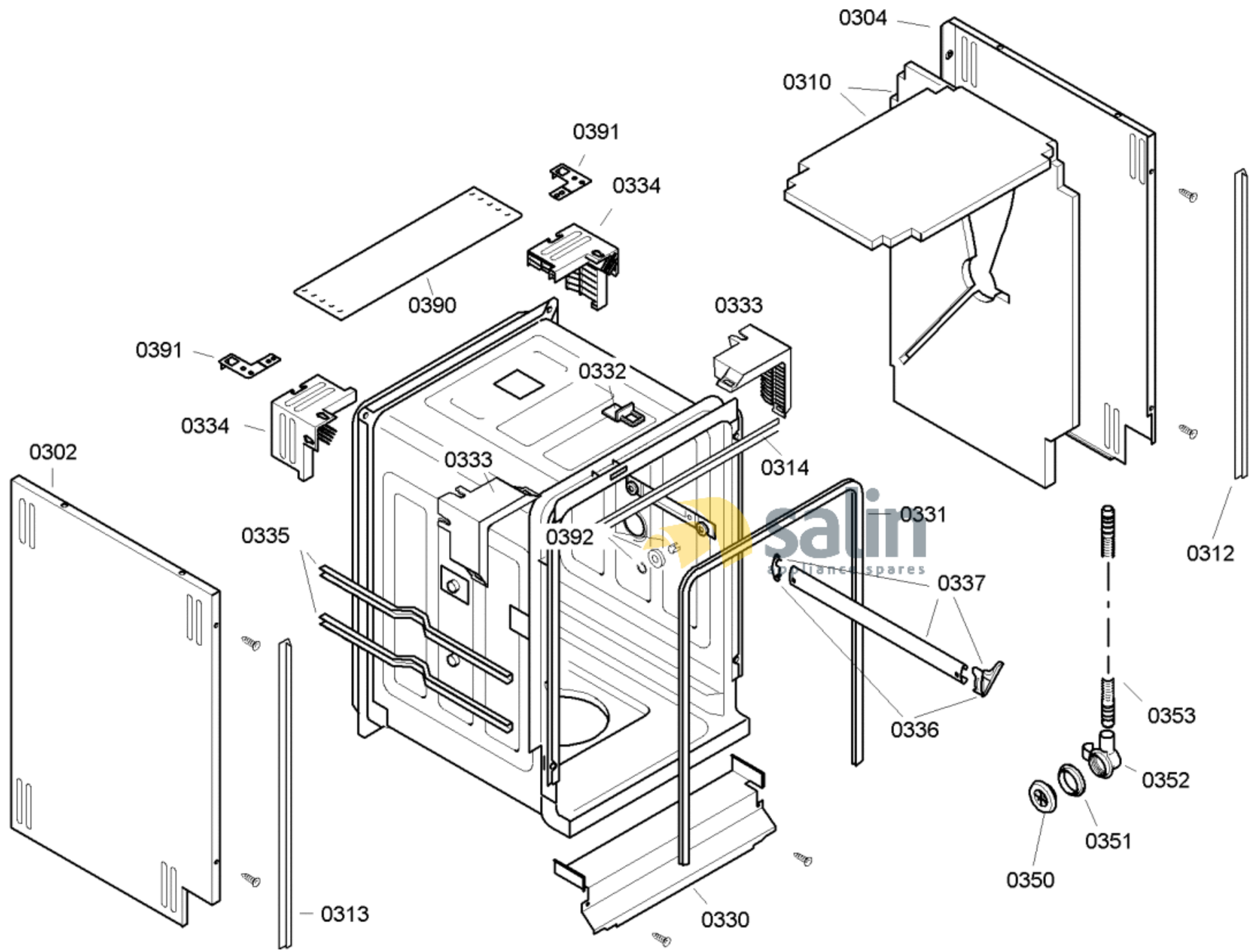

58300000103977 aet 000 b 3/6

FAMILY : SRU55T05EU

MODEL NO: SRU55T05EU/15

Check Position No/Part No or Replacement No

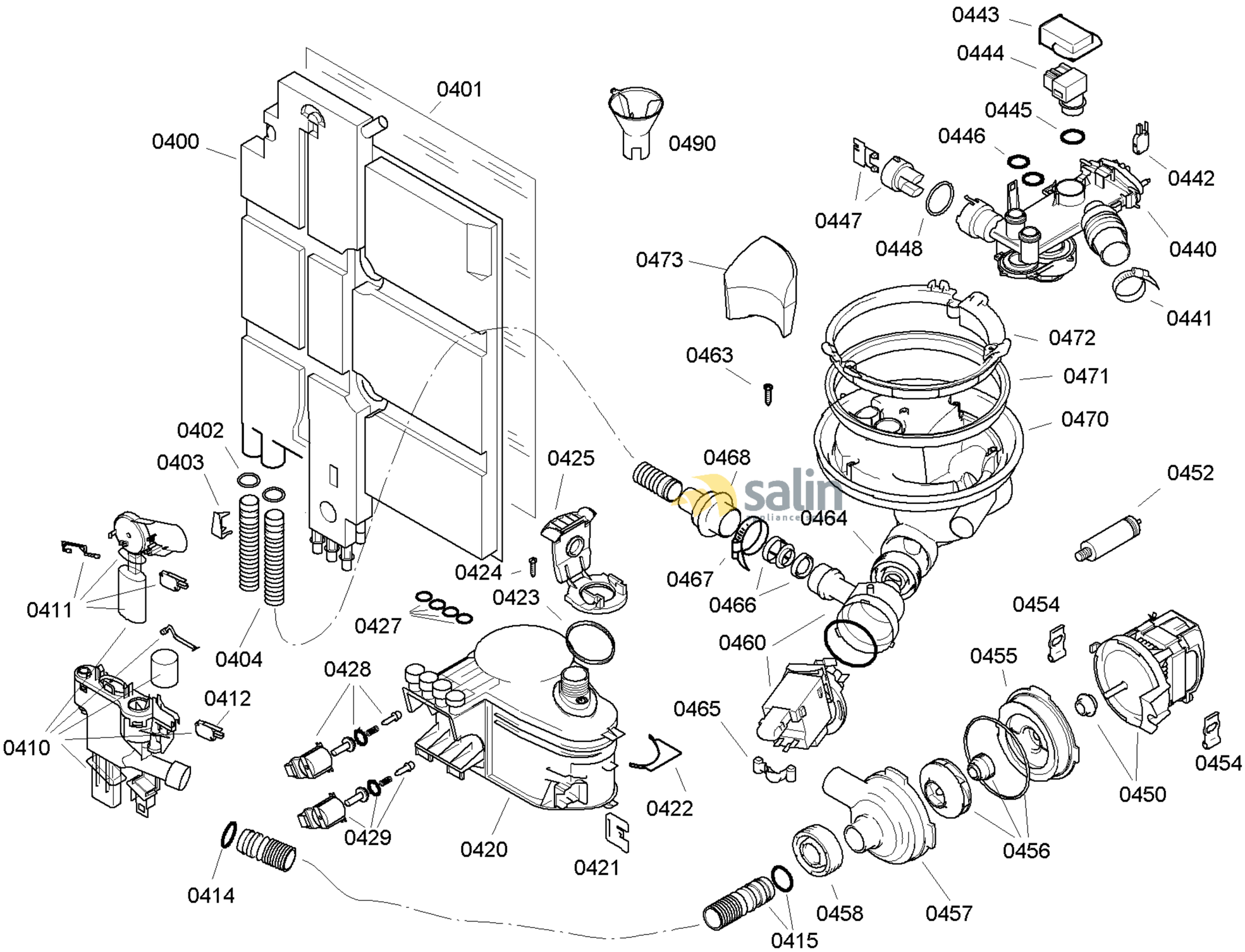

58300000103977 aet 000 b 4/6

FAMILY : SRU55T05EU
MODEL NO: SRU55T05EU/15
Check Position No/Part No or Replacement No

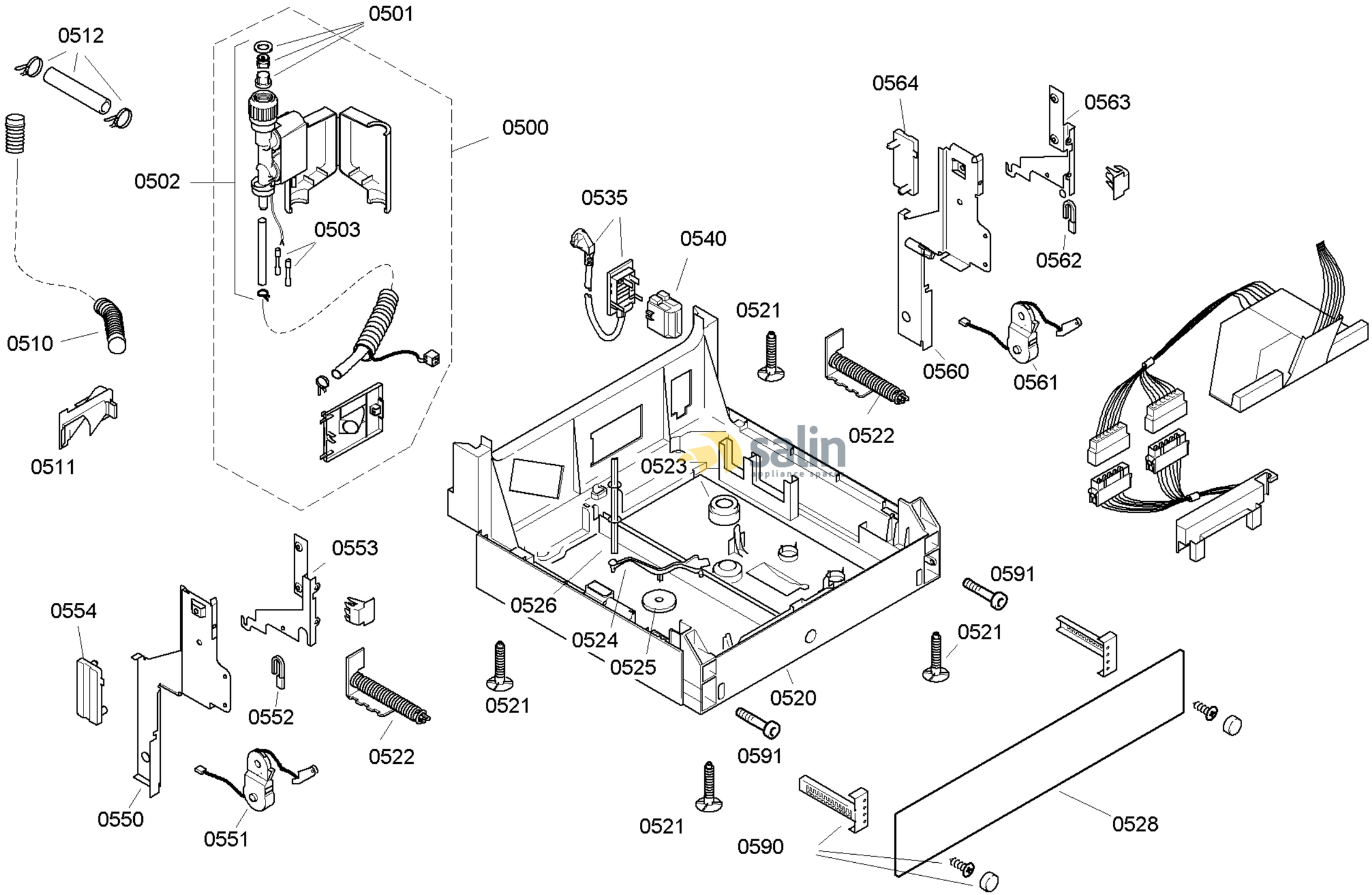

58300000103977 aet 000 b 5/6

FAMILY : SRU55T05EU
MODEL NO: SRU55T05EU/15
Check Position No/Part No or Replacement No

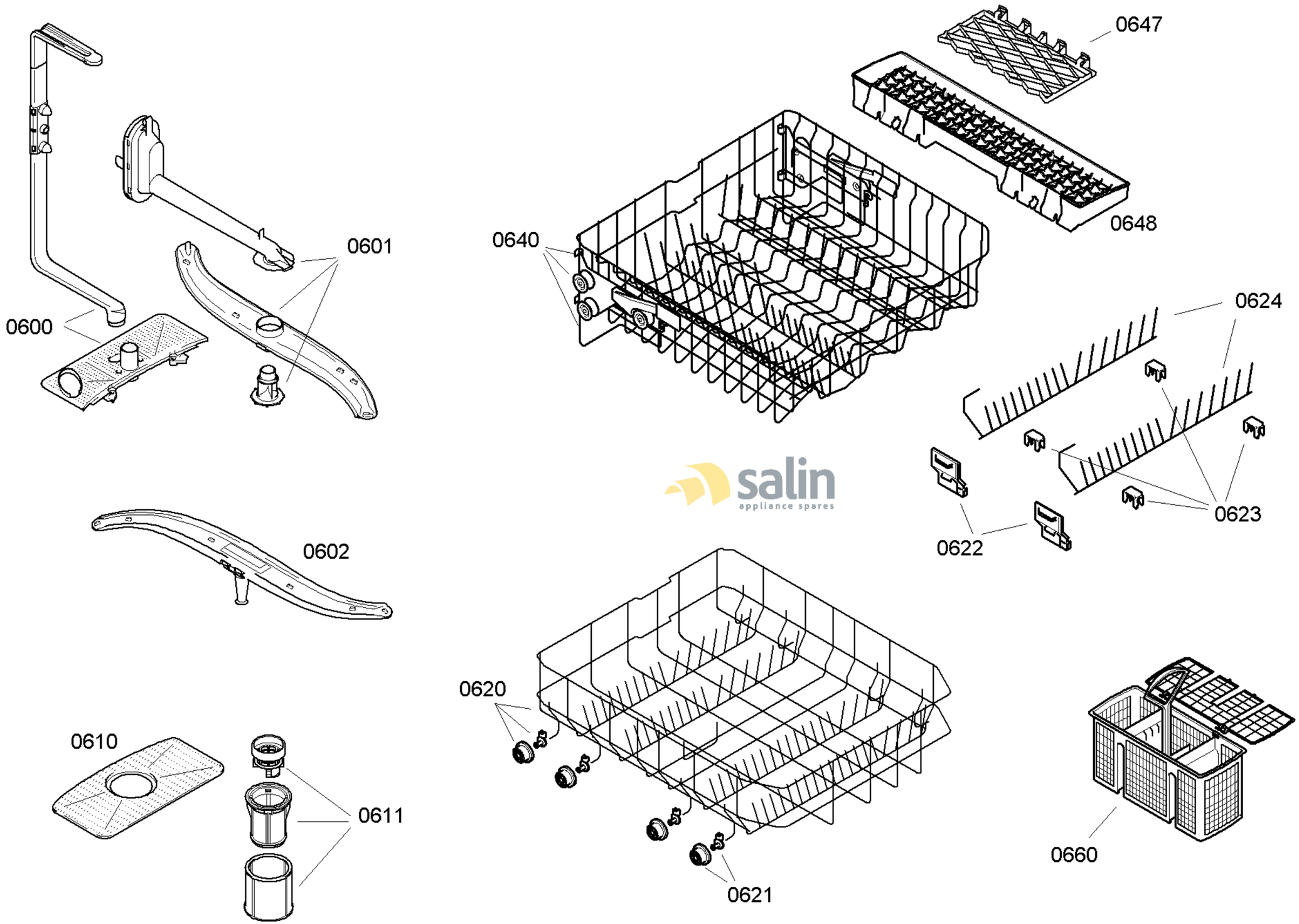

58300000103977 aet 000 b 6/6

FAMILY : SRU55T05EU
MODEL NO: SRU55T05EU/15
Check Position No/Part No or Replacement No