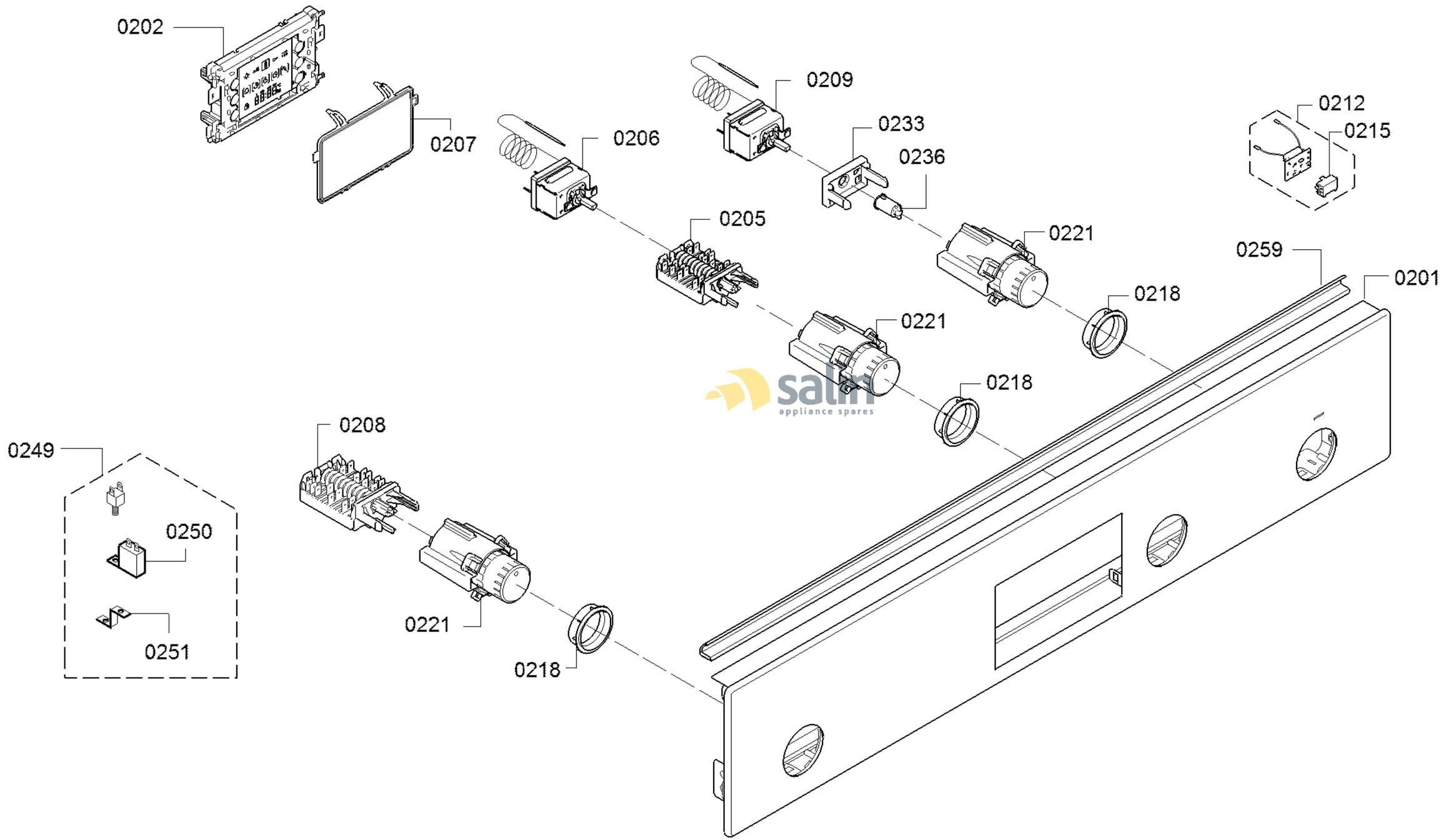

58300000207593 aet 000 a 2/9

FAMILY : HBN13B261B
MODEL NO: HBN13B261B/70
Check Position No/Part No or Replacement No

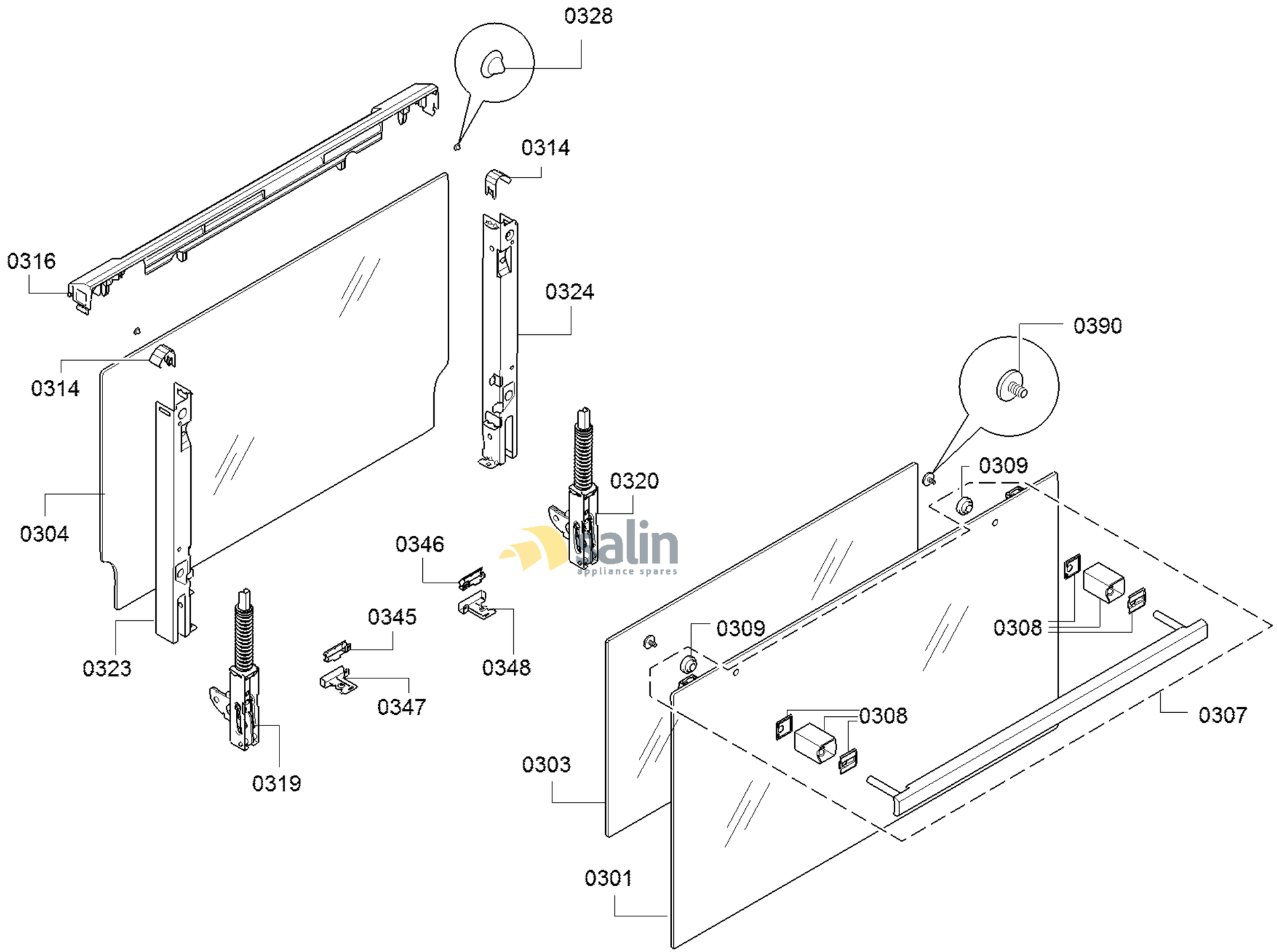

58300000207593 aet 000 a 3/9

FAMILY : HBN13B261B
MODEL NO: HBN13B261B/70
Check Position No/Part No or Replacement No

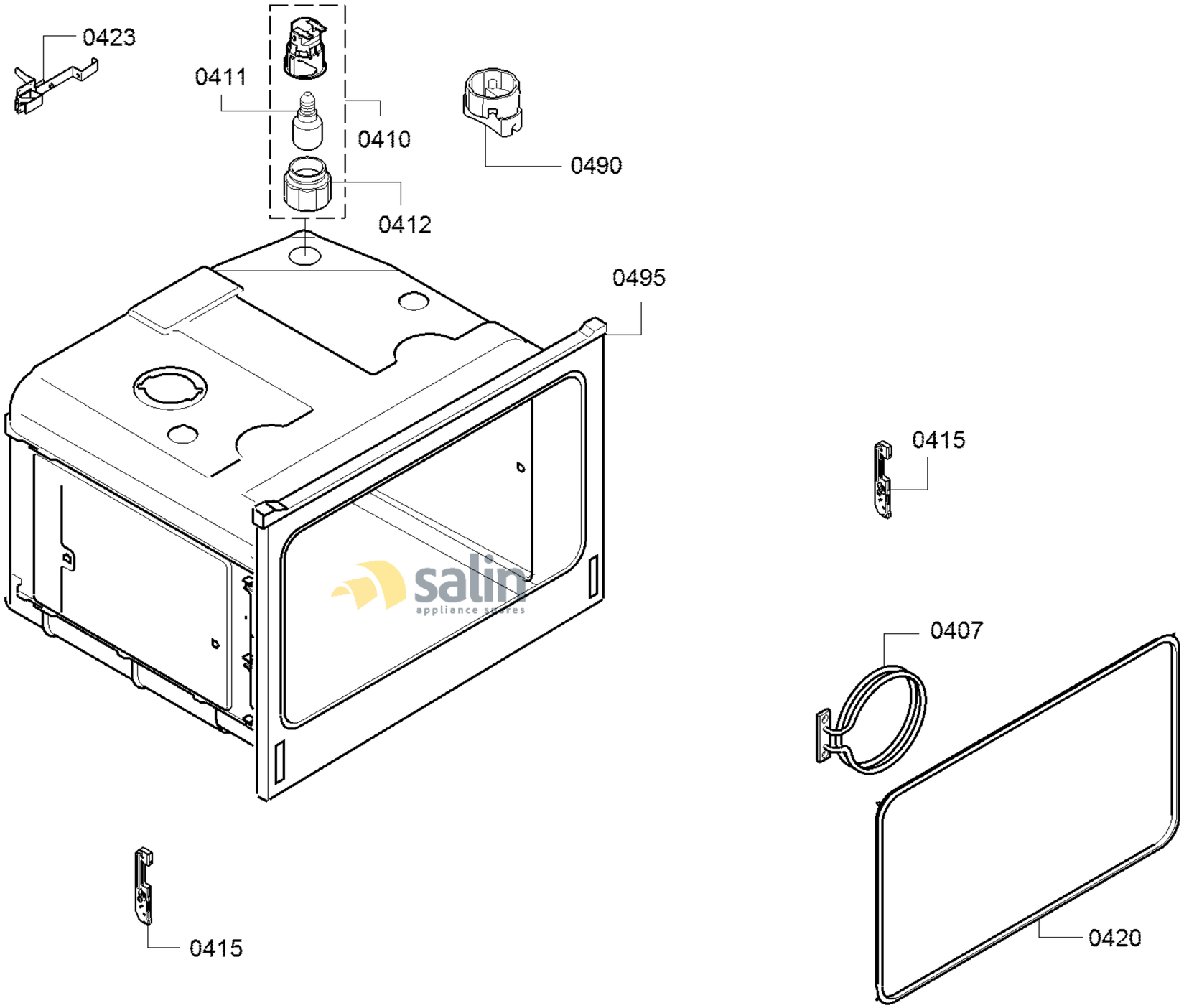

58300000207593 aet 000 a 4/9

FAMILY : HBN13B261B
MODEL NO: HBN13B261B/70
Check Position No/Part No or Replacement No

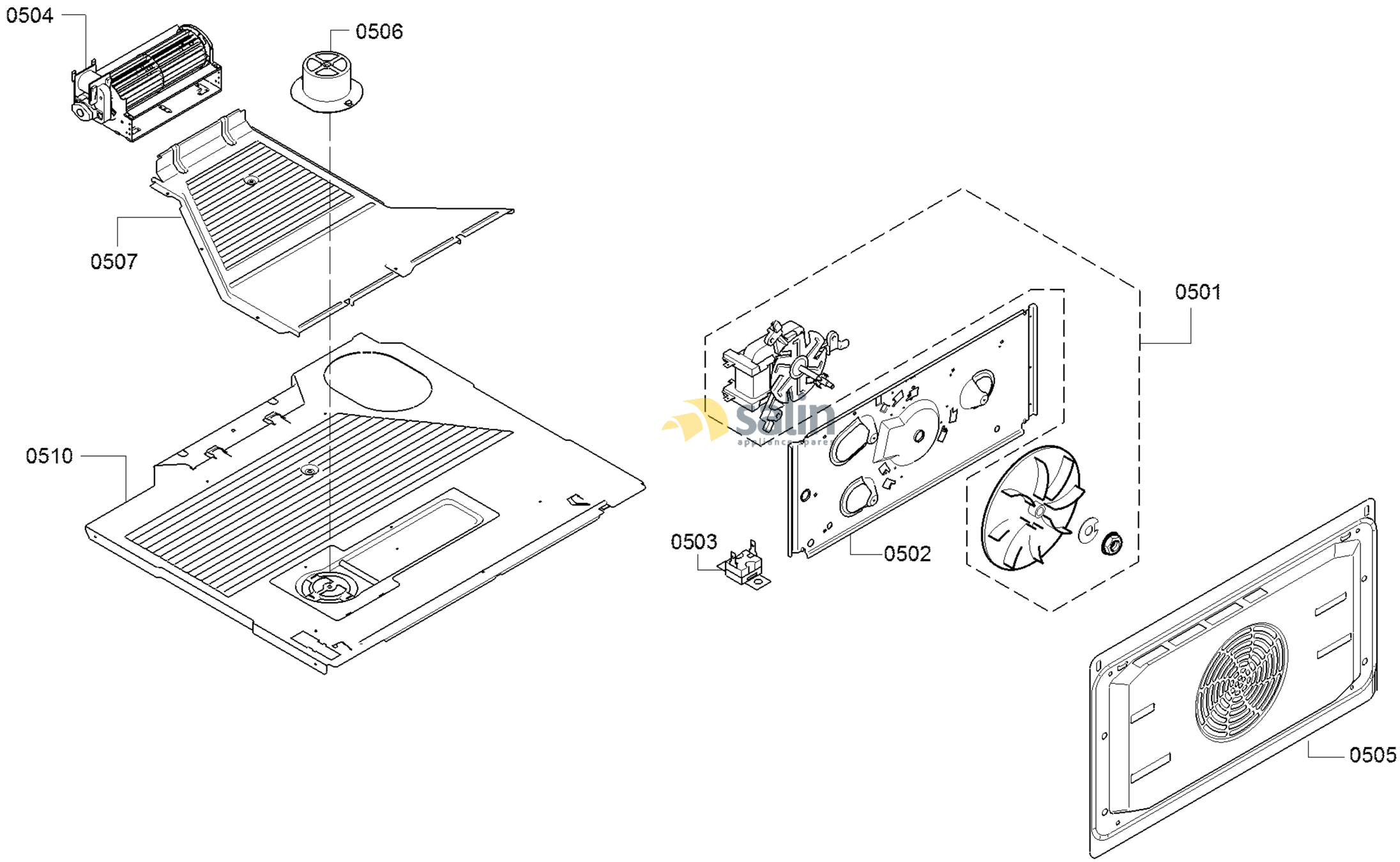

58300000207593 aet 000 a 5/9

FAMILY : HBN13B261B
MODEL NO: HBN13B261B/70
Check Position No/Part No or Replacement No

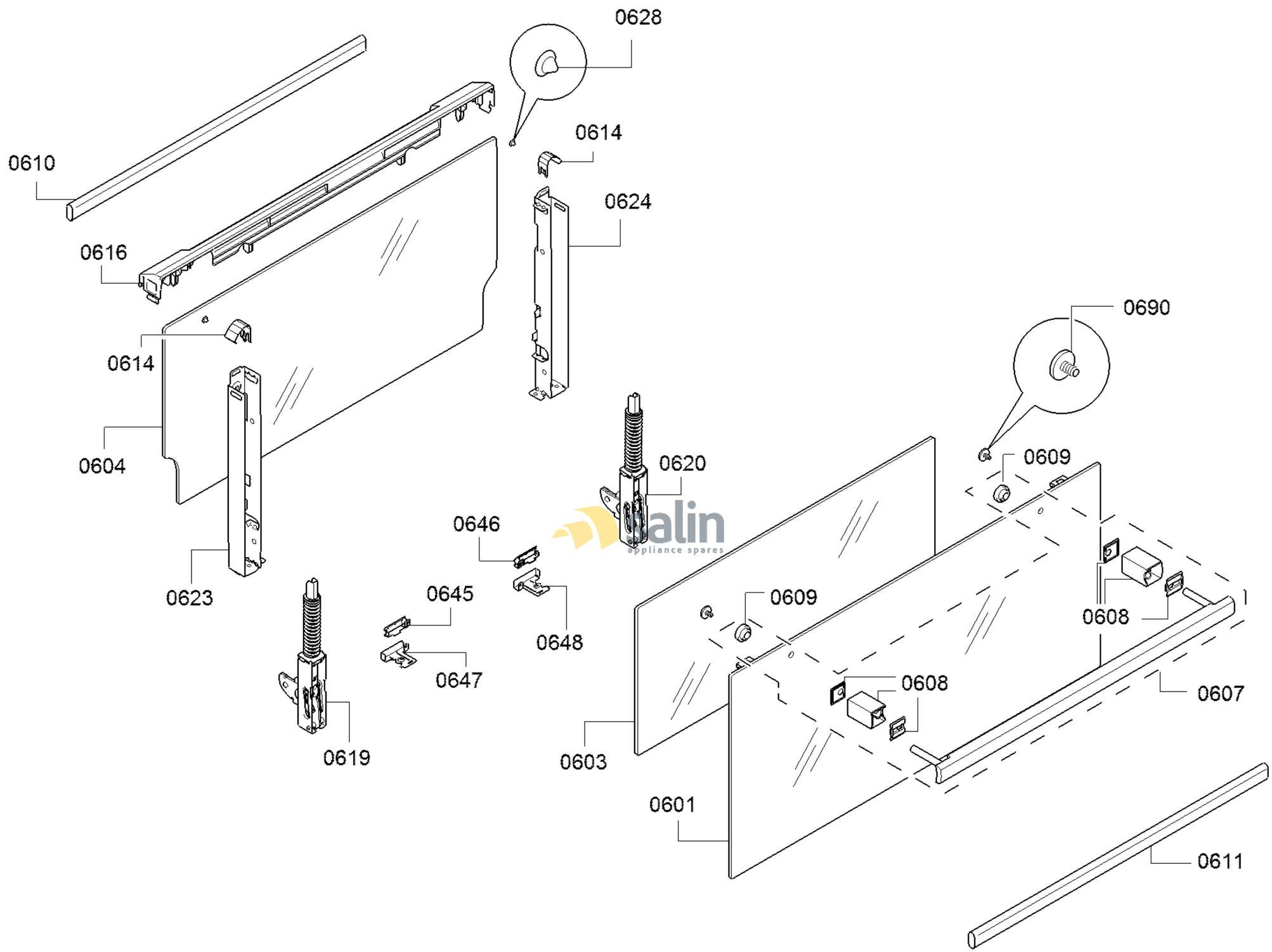

58300000207593 aet 000 a 6/9

FAMILY : HBN13B261B
MODEL NO: HBN13B261B/70
Check Position No/Part No or Replacement No

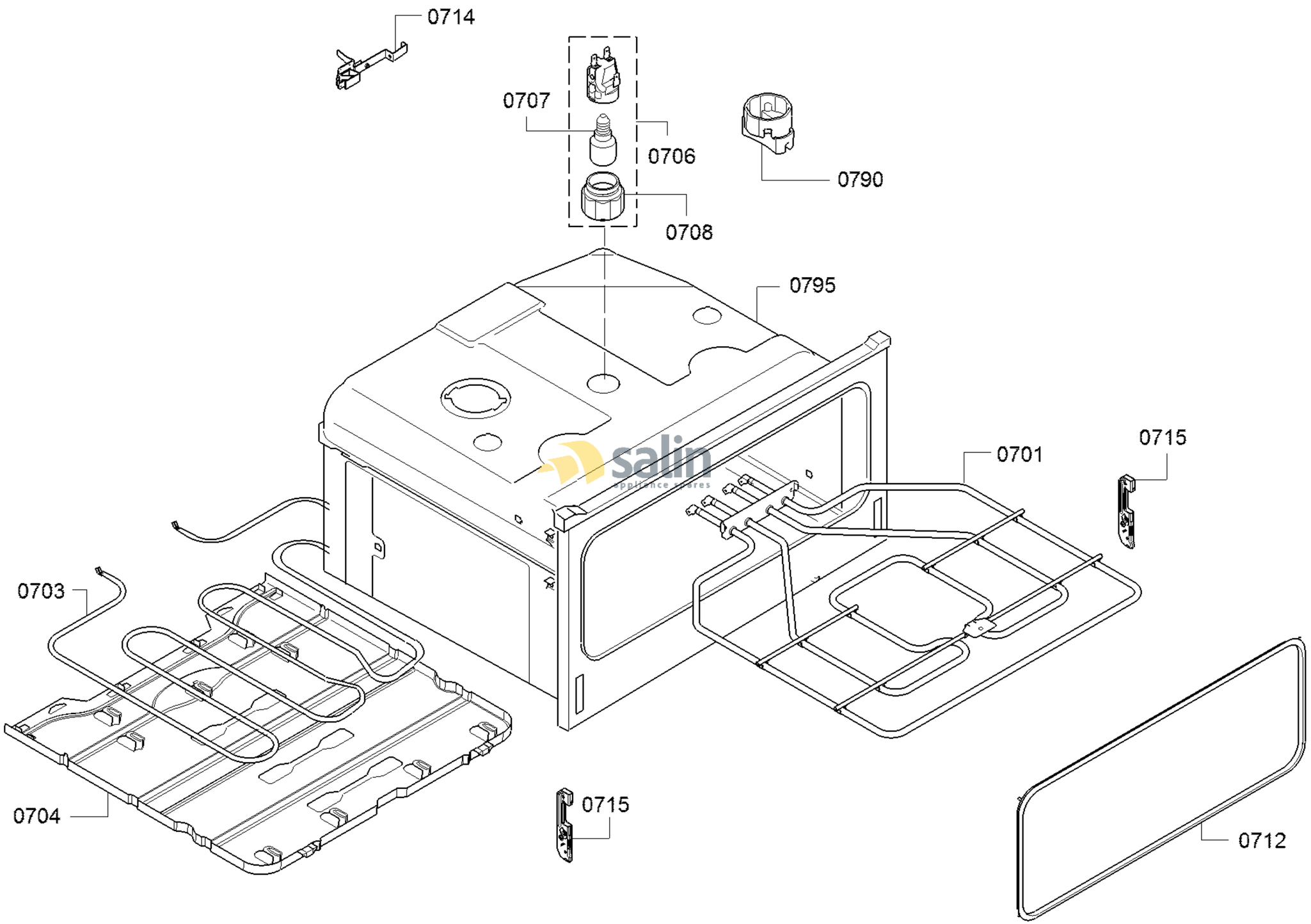

58300000207593 aet 000 a 7/9

FAMILY : HBN13B261B
MODEL NO: HBN13B261B/70
Check Position No/Part No or Replacement No

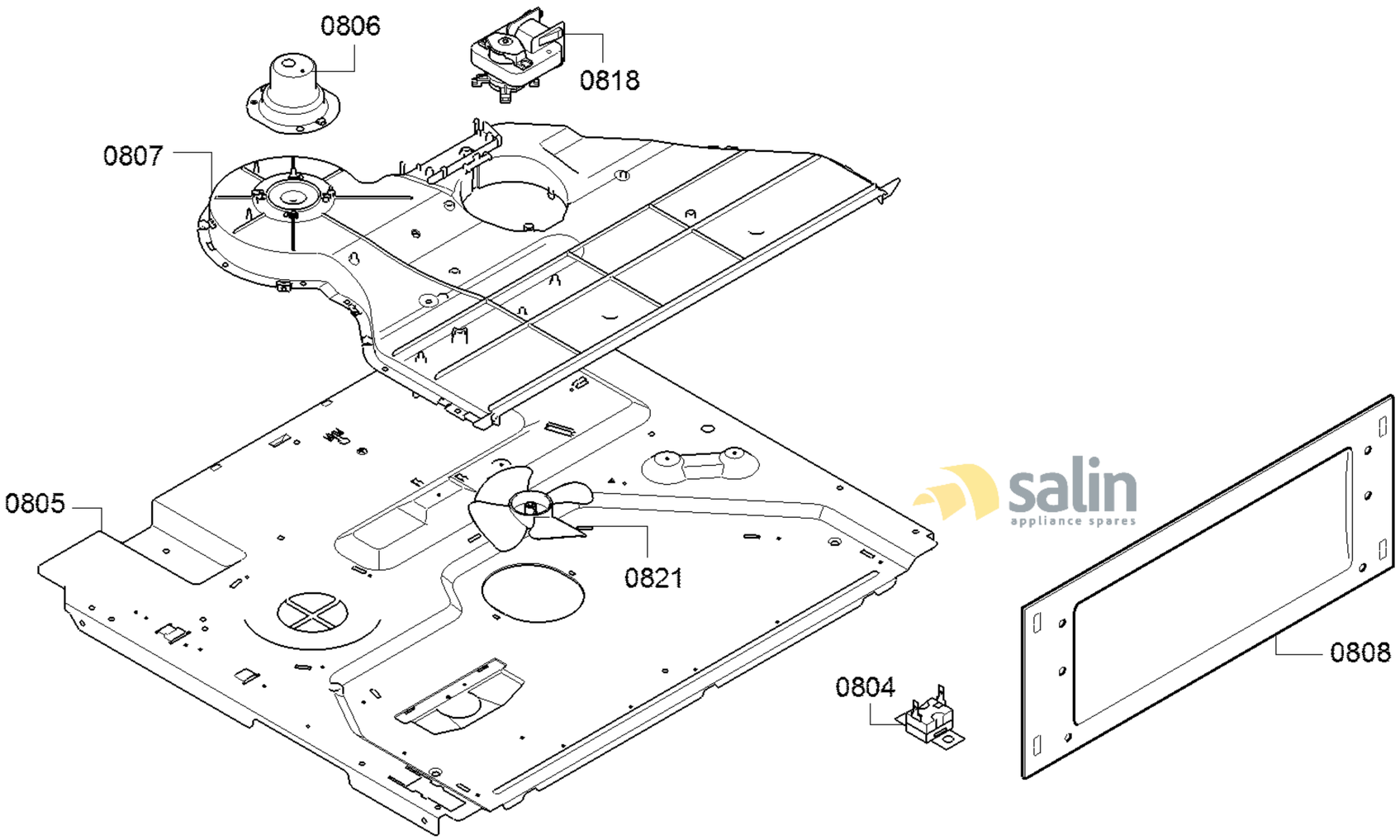

58300000207593 aet 000 a 8/9

FAMILY : HBN13B261B
MODEL NO: HBN13B261B/70
Check Position No/Part No or Replacement No

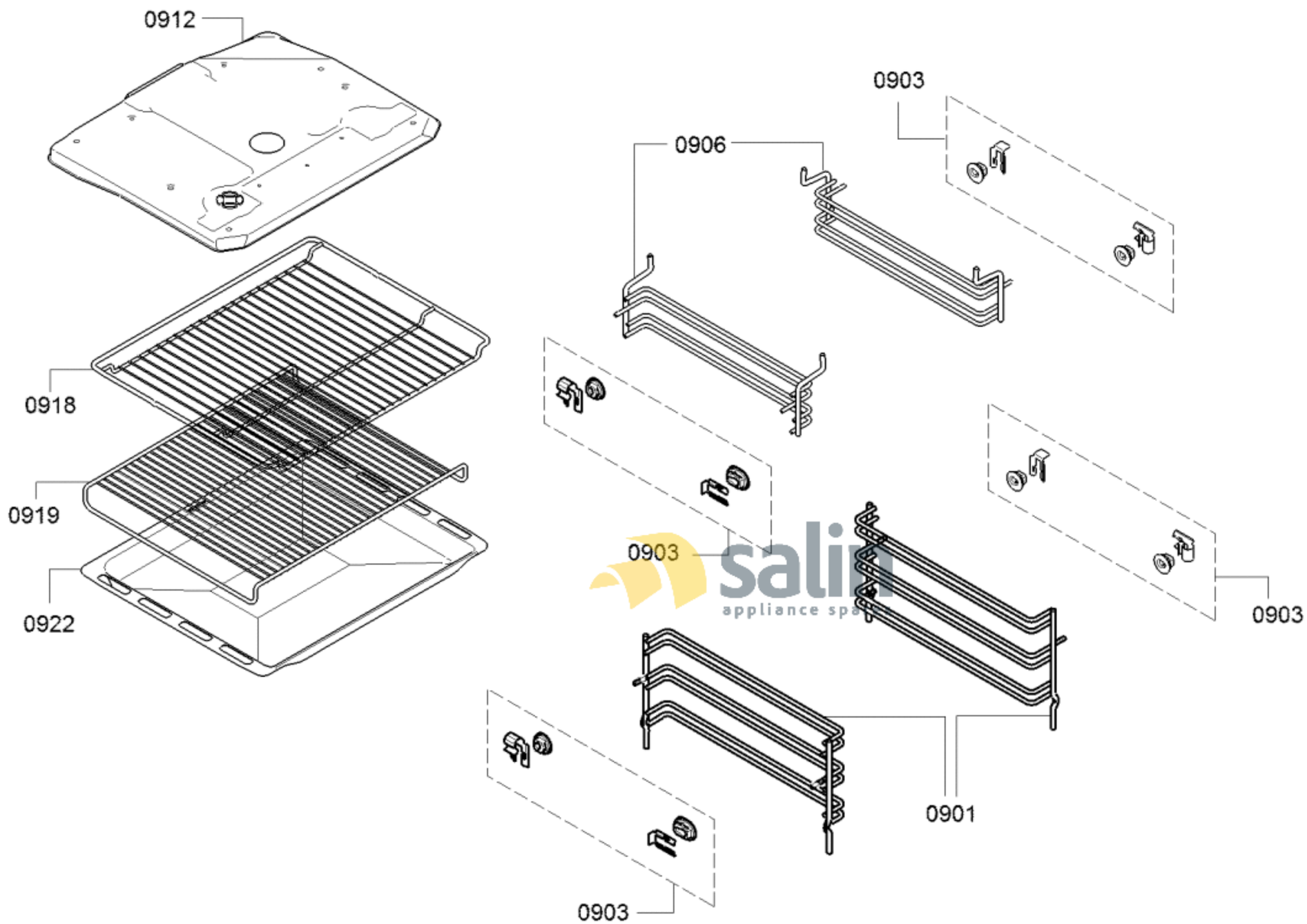

58300000207593 aet 000 a 9/9

FAMILY : HBN13B261B

MODEL NO: HBN13B261B/70

Check Position No/Part No or Replacement No