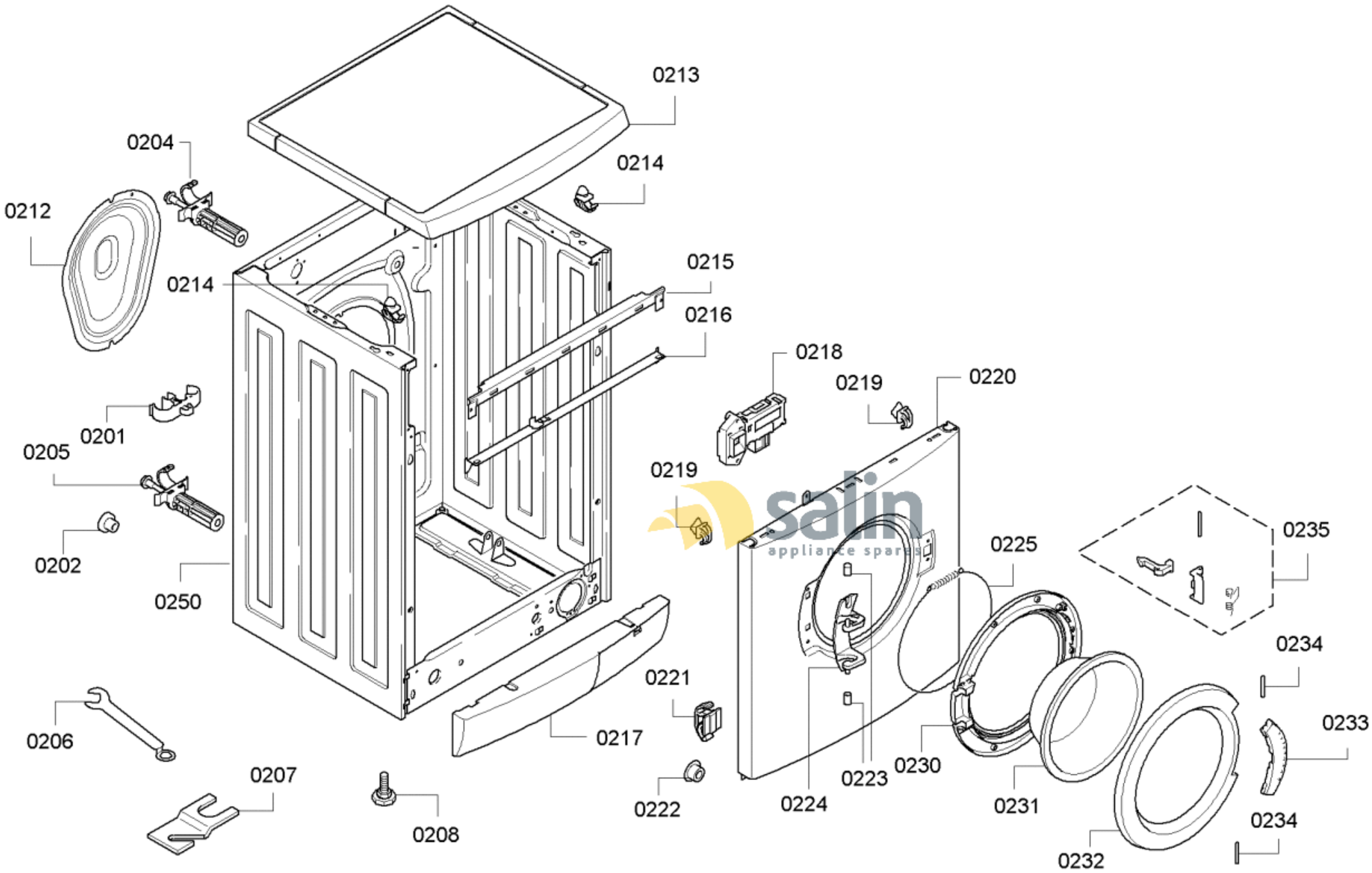


58300000152148 aet 000 a 2/5

FAMILY : WAE24263FF

MODEL NO: WAE24263FF/15

Check Position No/Part No or Replacement No

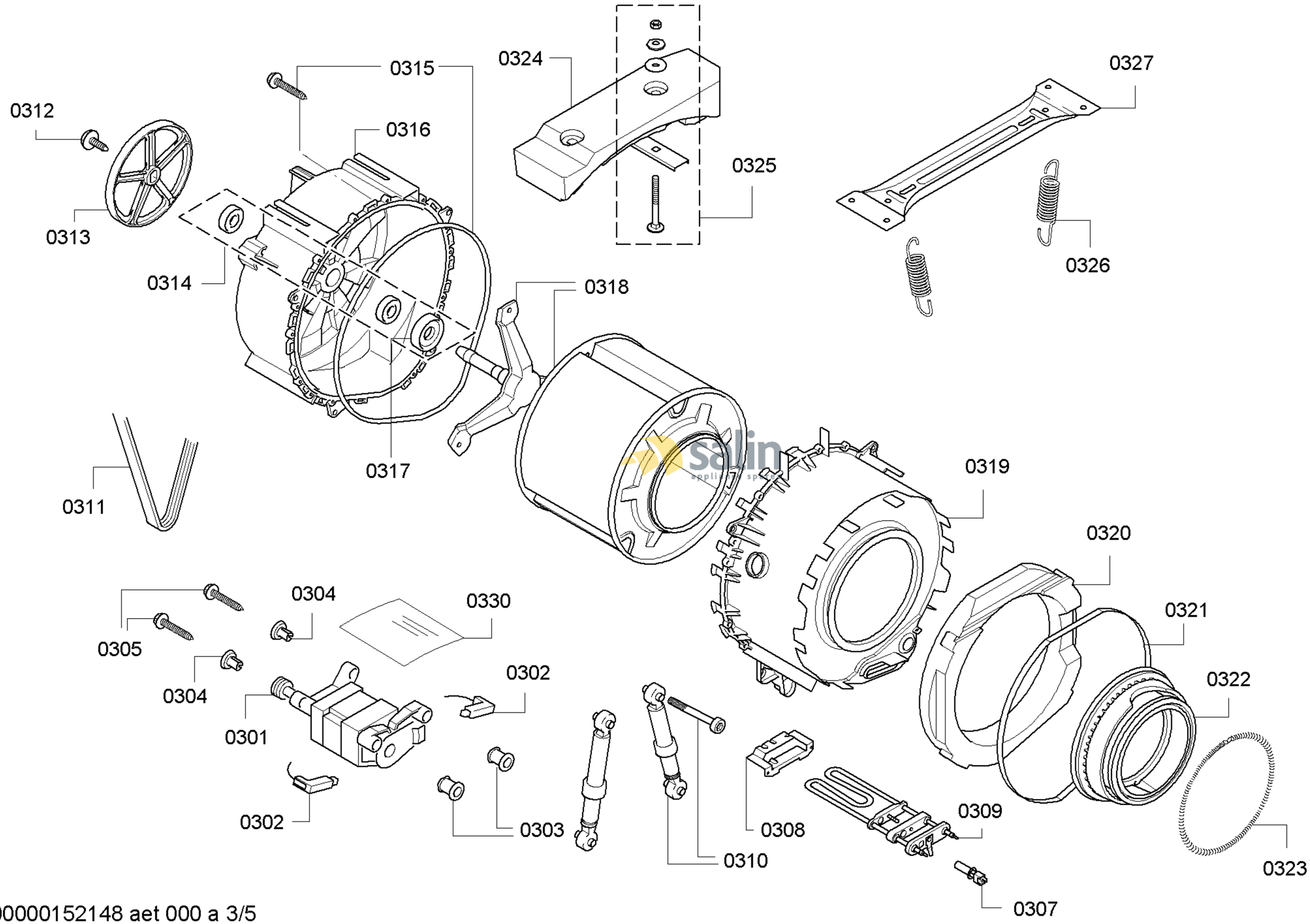


58300000152148 aet 000 a 3/5

FAMILY : WAE24263FF
MODEL NO: WAE24263FF/15
Check Position No/Part No or Replacement No

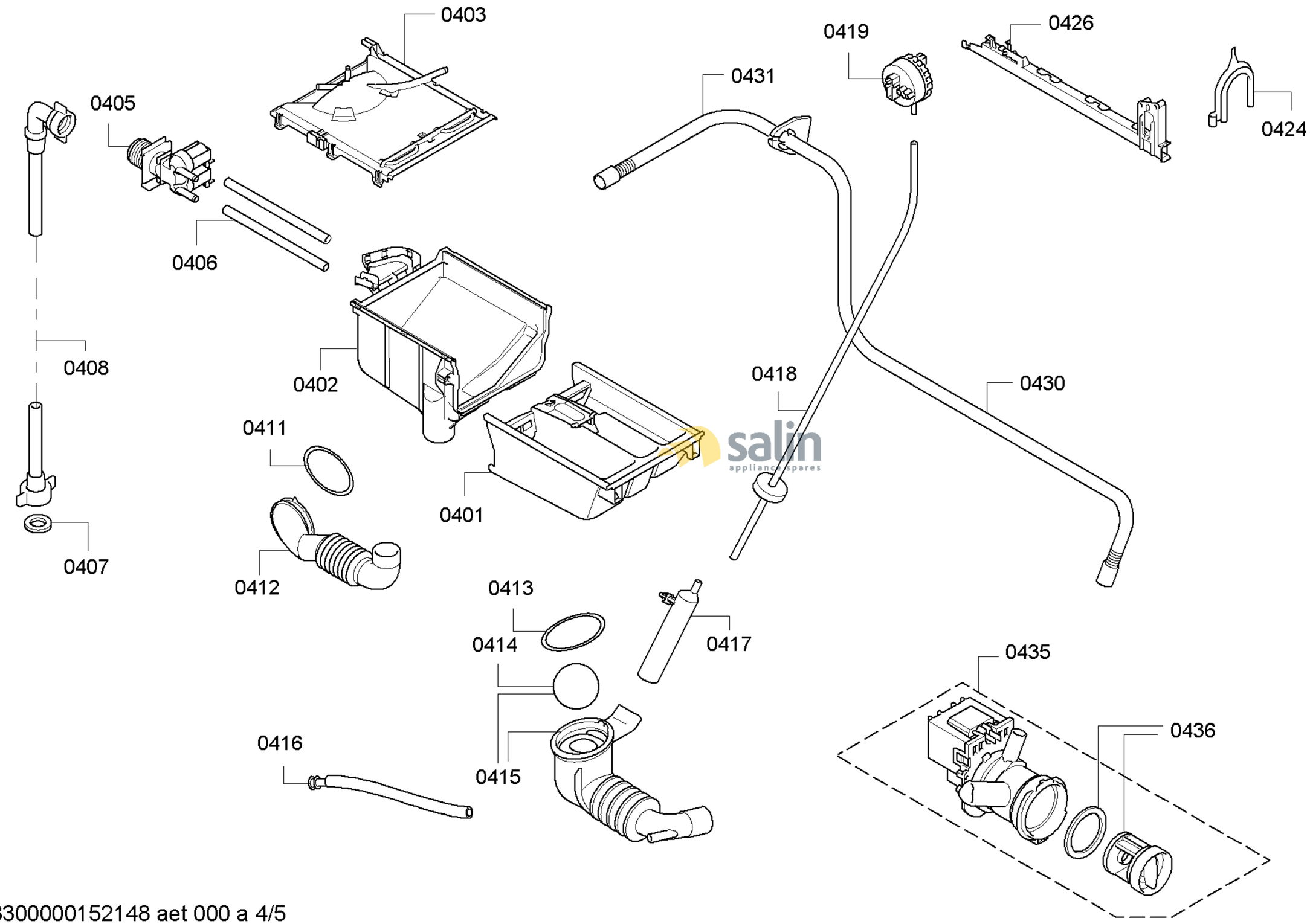


58300000152148 aet 000 a 4/5

FAMILY : WAE24263FF
MODEL NO: WAE24263FF/15
Check Position No/Part No or Replacement No