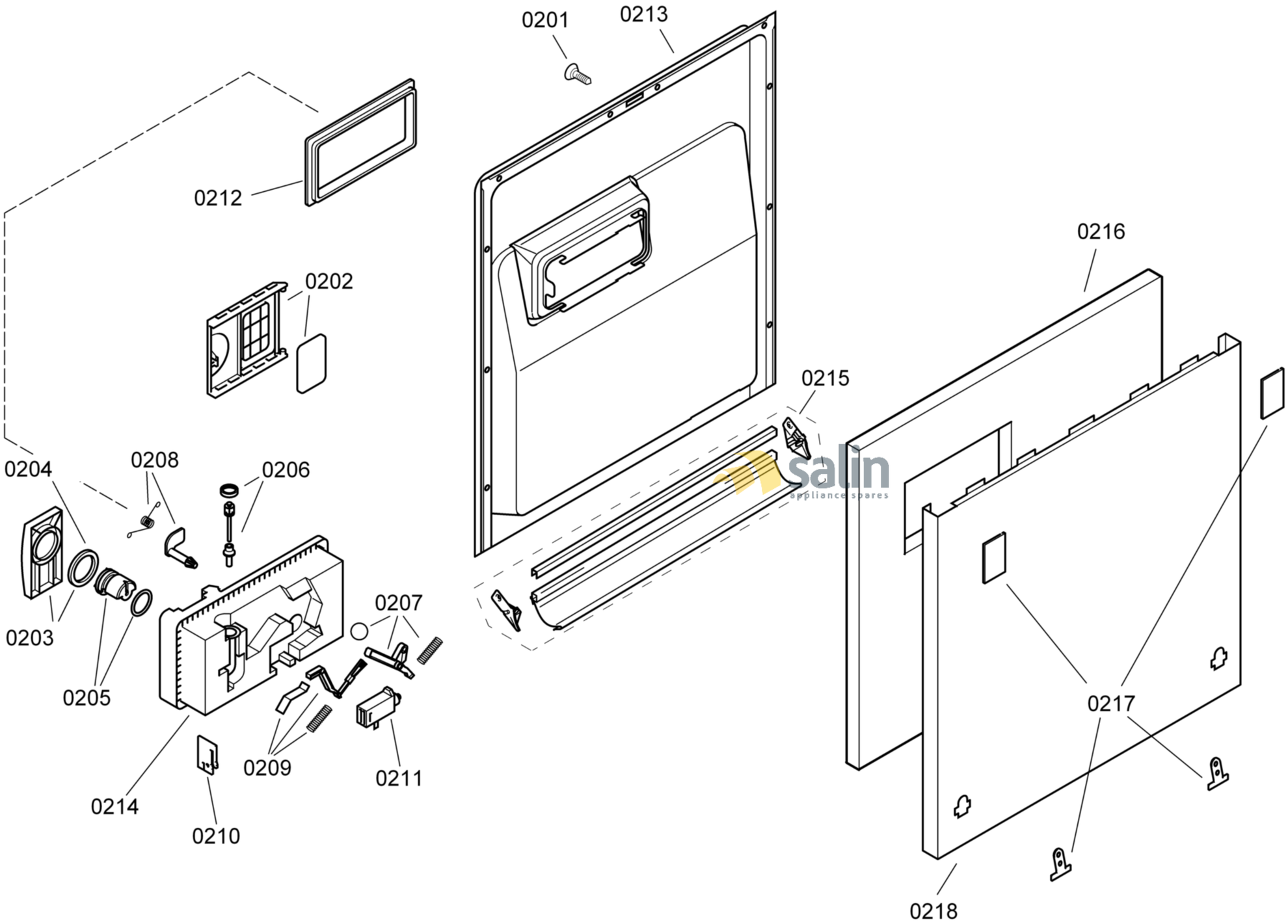

58300000118355 aet 000 e 2/6

FAMILY : SGV43E43EU
MODEL NO: SGV43E43EU/23
Check Position No/Part No or Replacement No

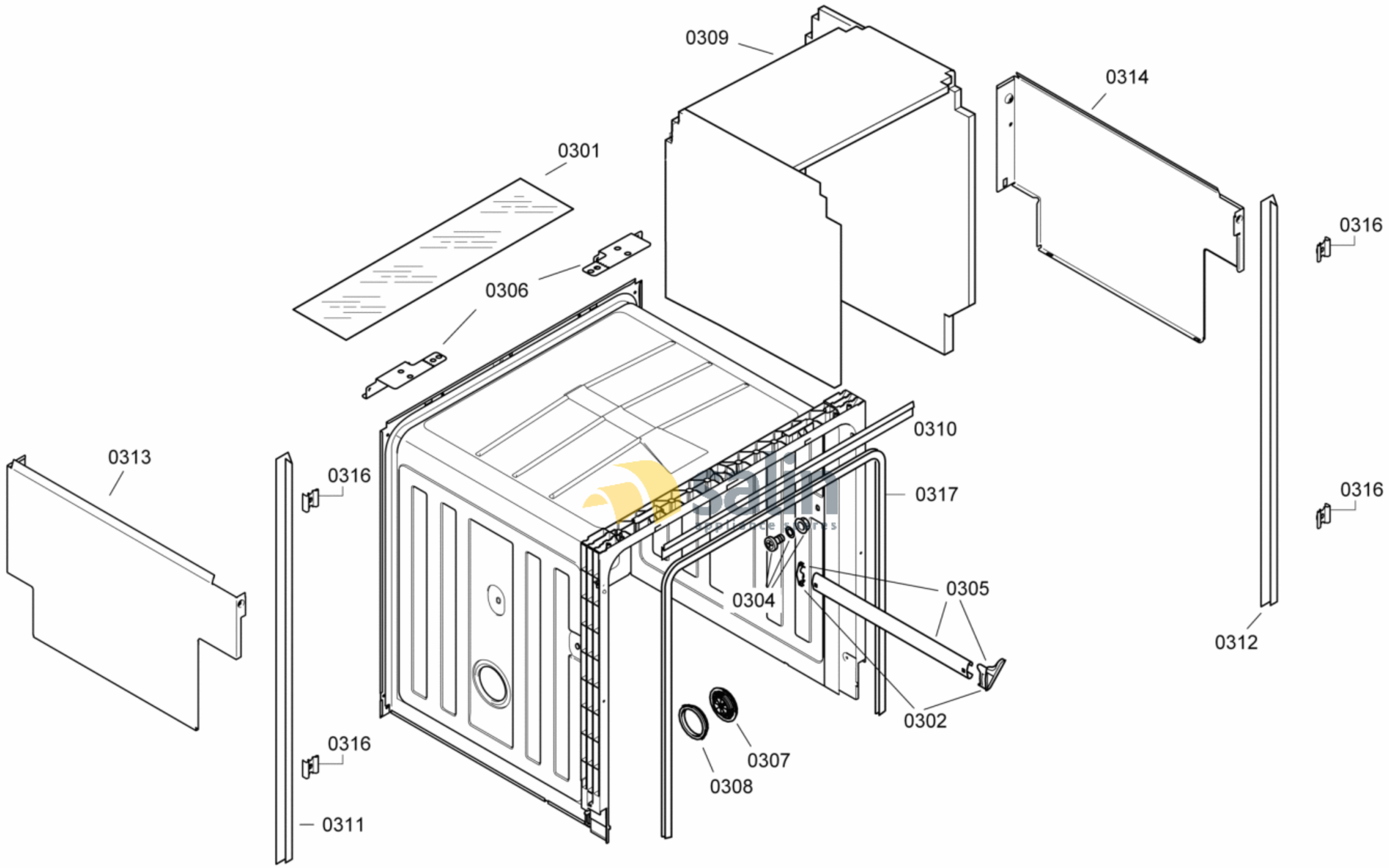

58300000118355 aet 000 e 3/6

FAMILY : SGV43E43EU

MODEL NO: SGV43E43EU/23

Check Position No/Part No or Replacement No

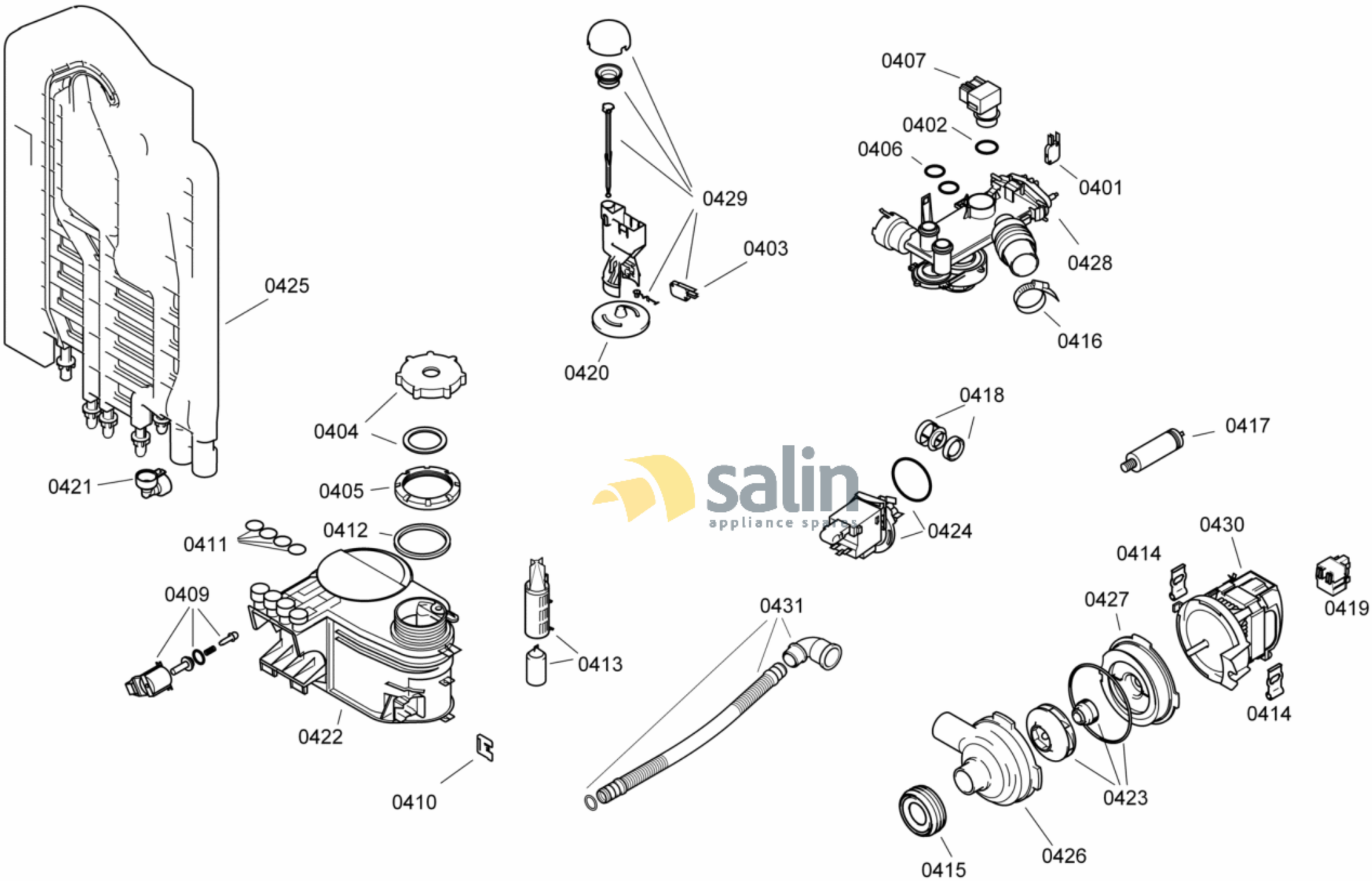

58300000118355 aet 000 e 4/6

FAMILY : SGV43E43EU

MODEL NO: SGV43E43EU/23

Check Position No/Part No or Replacement No

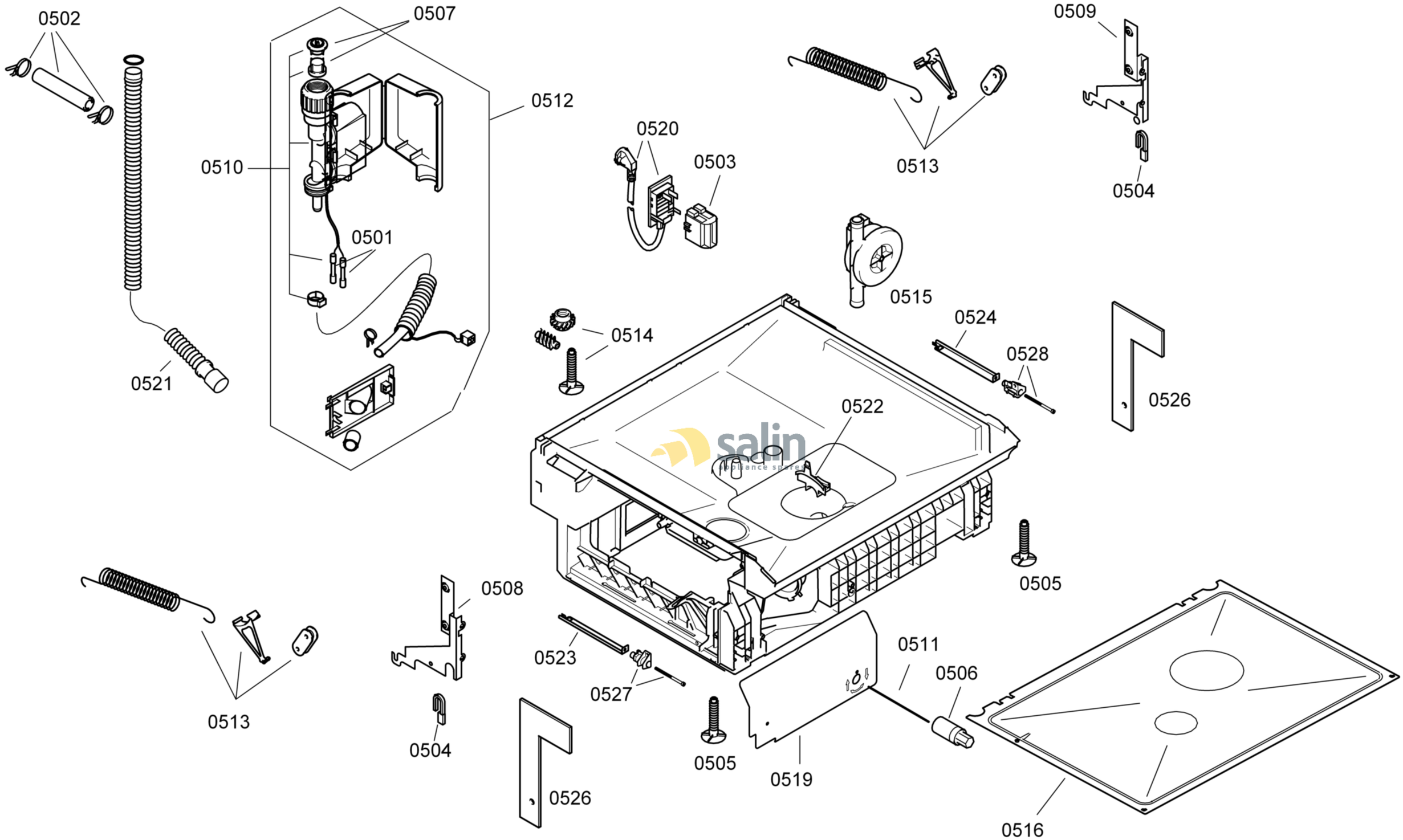

58300000118355 aet 000 e 5/6

FAMILY : SGV43E43EU
MODEL NO: SGV43E43EU/23
Check Position No/Part No or Replacement No

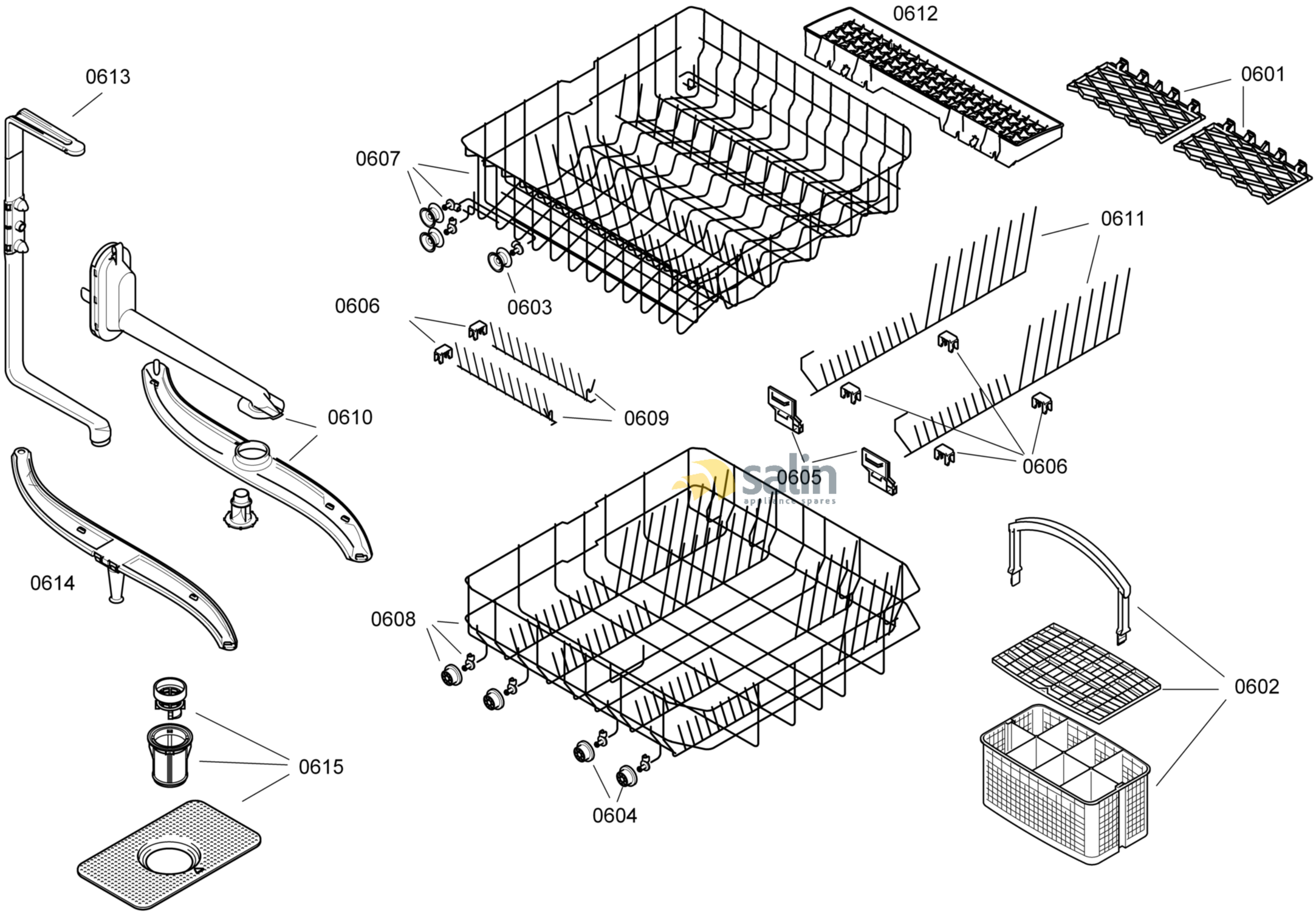

58300000118355 aet 000 e 6/6

FAMILY : SGV43E43EU
MODEL NO: SGV43E43EU/23
Check Position No/Part No or Replacement No