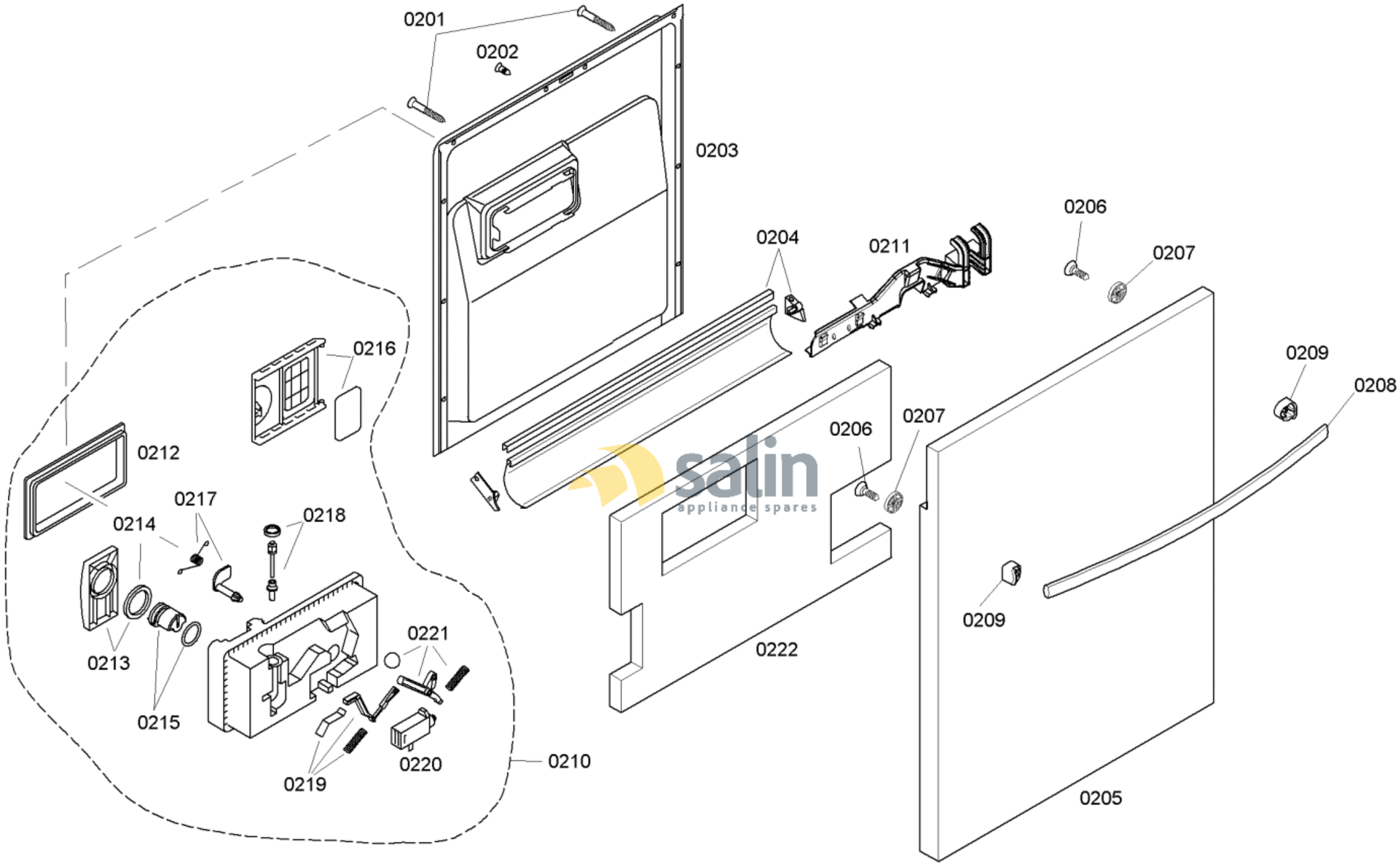

58300000119999 aet 000 b 2/6

FAMILY : SHX33A06UC

MODEL NO: SHX33A06UC/40

Check Position No/Part No or Replacement No

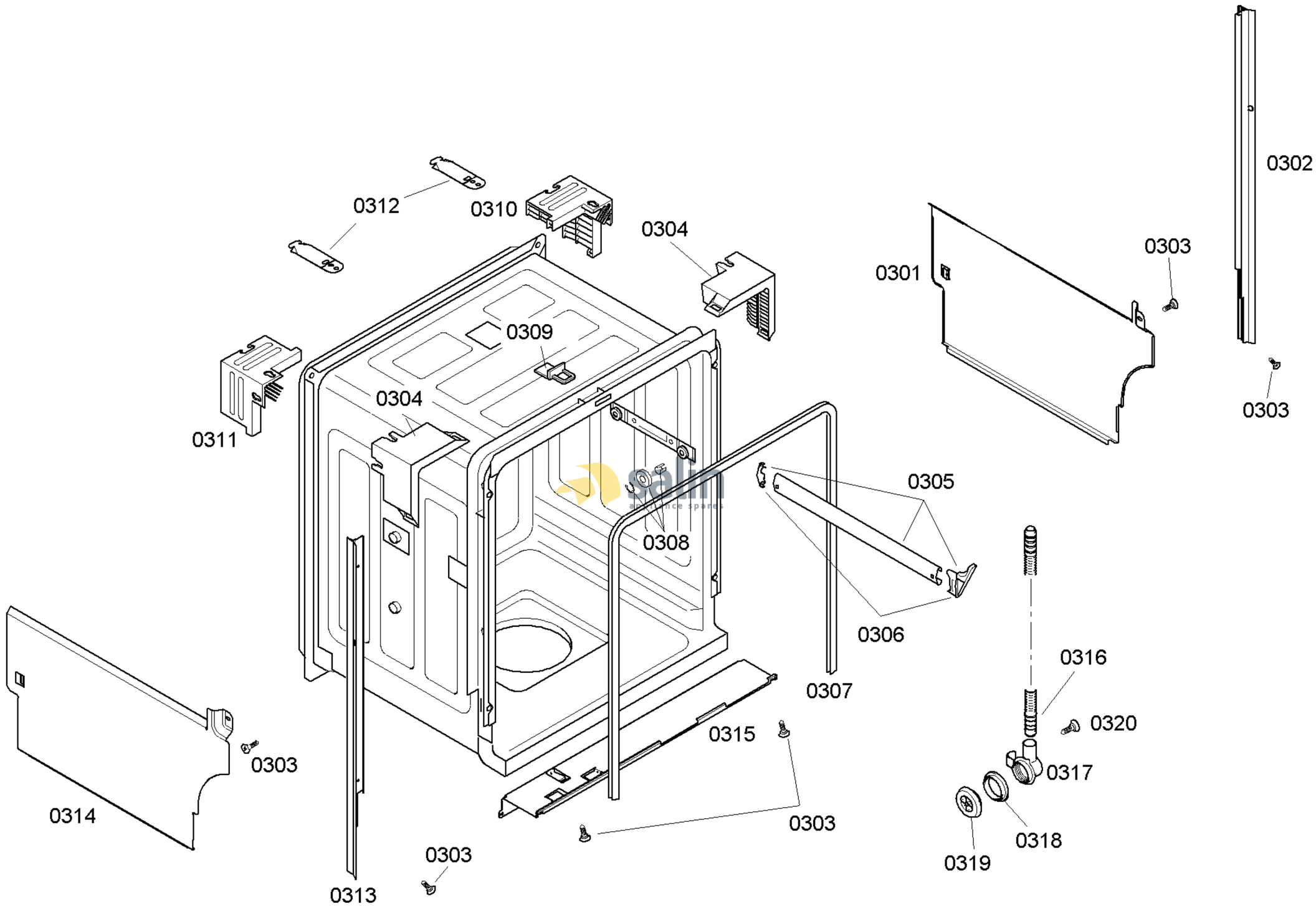

58300000119999 aet 000 b 3/6

FAMILY : SHX33A06UC
MODEL NO: SHX33A06UC/40
Check Position No/Part No or Replacement No

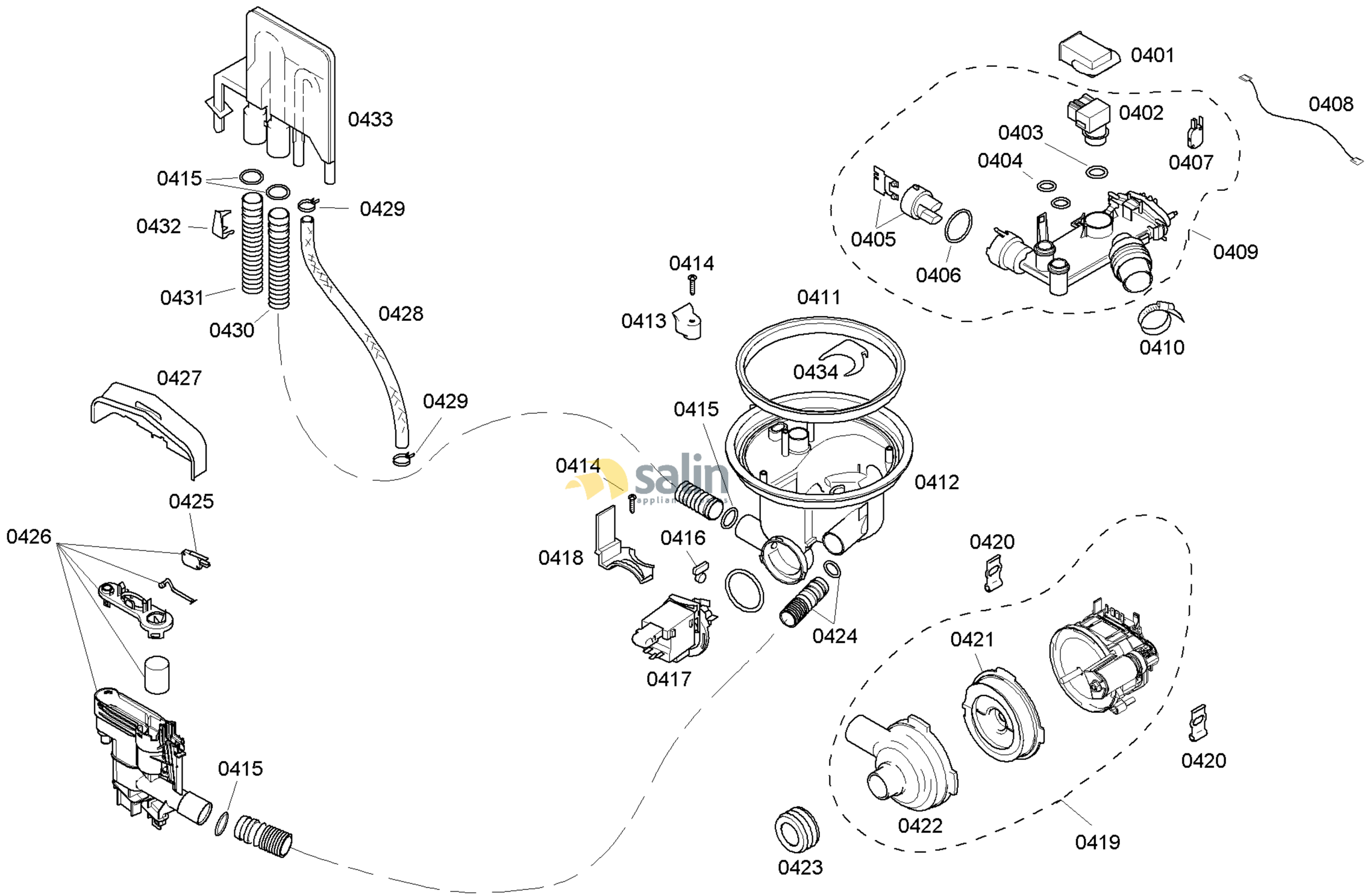

58300000119999 aet 000 b 4/6

FAMILY : SHX33A06UC
MODEL NO: SHX33A06UC/40
Check Position No/Part No or Replacement No

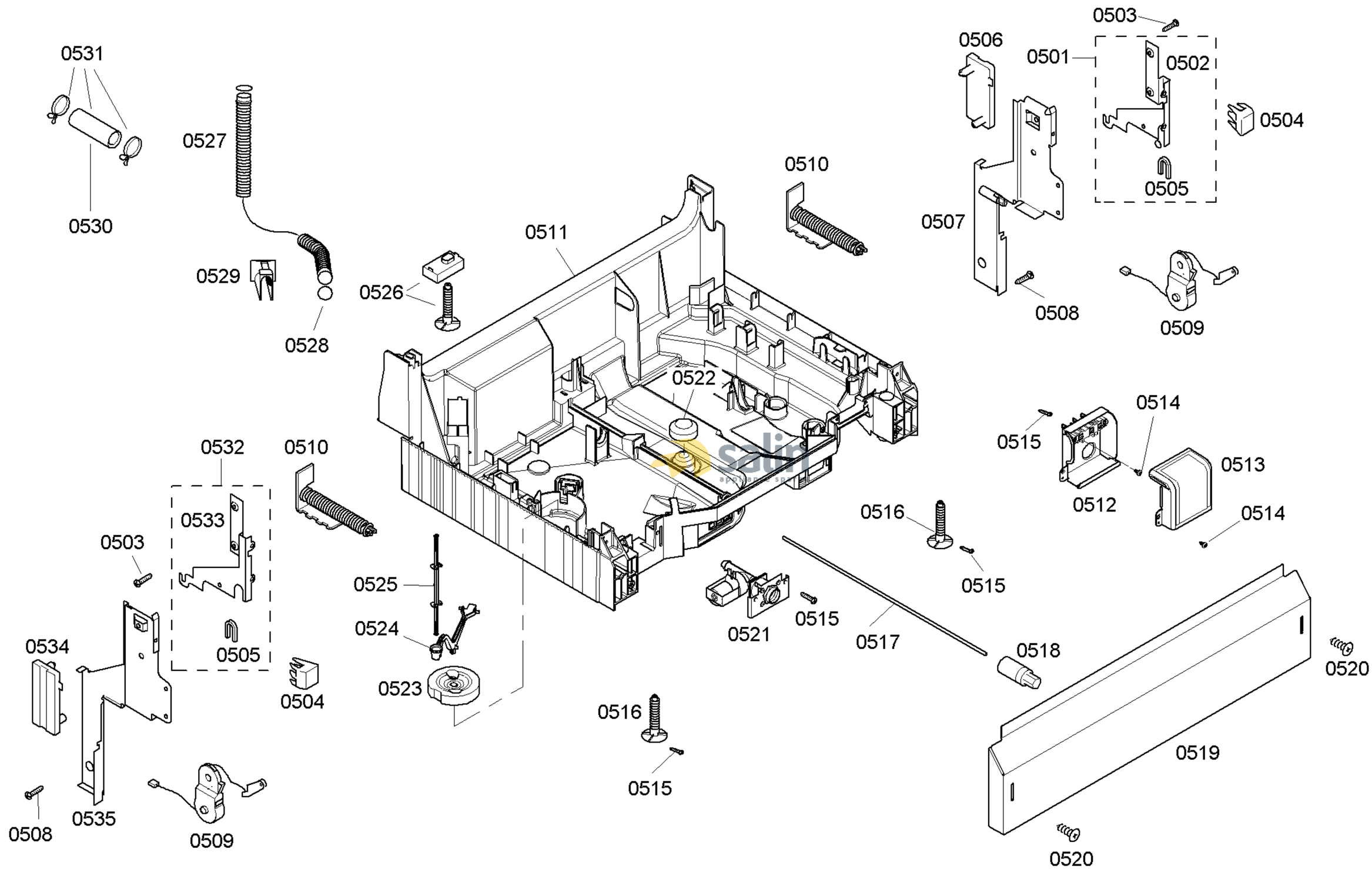

58300000119999 aet 000 b 5/6

FAMILY : SHX33A06UC
MODEL NO: SHX33A06UC/40
Check Position No/Part No or Replacement No

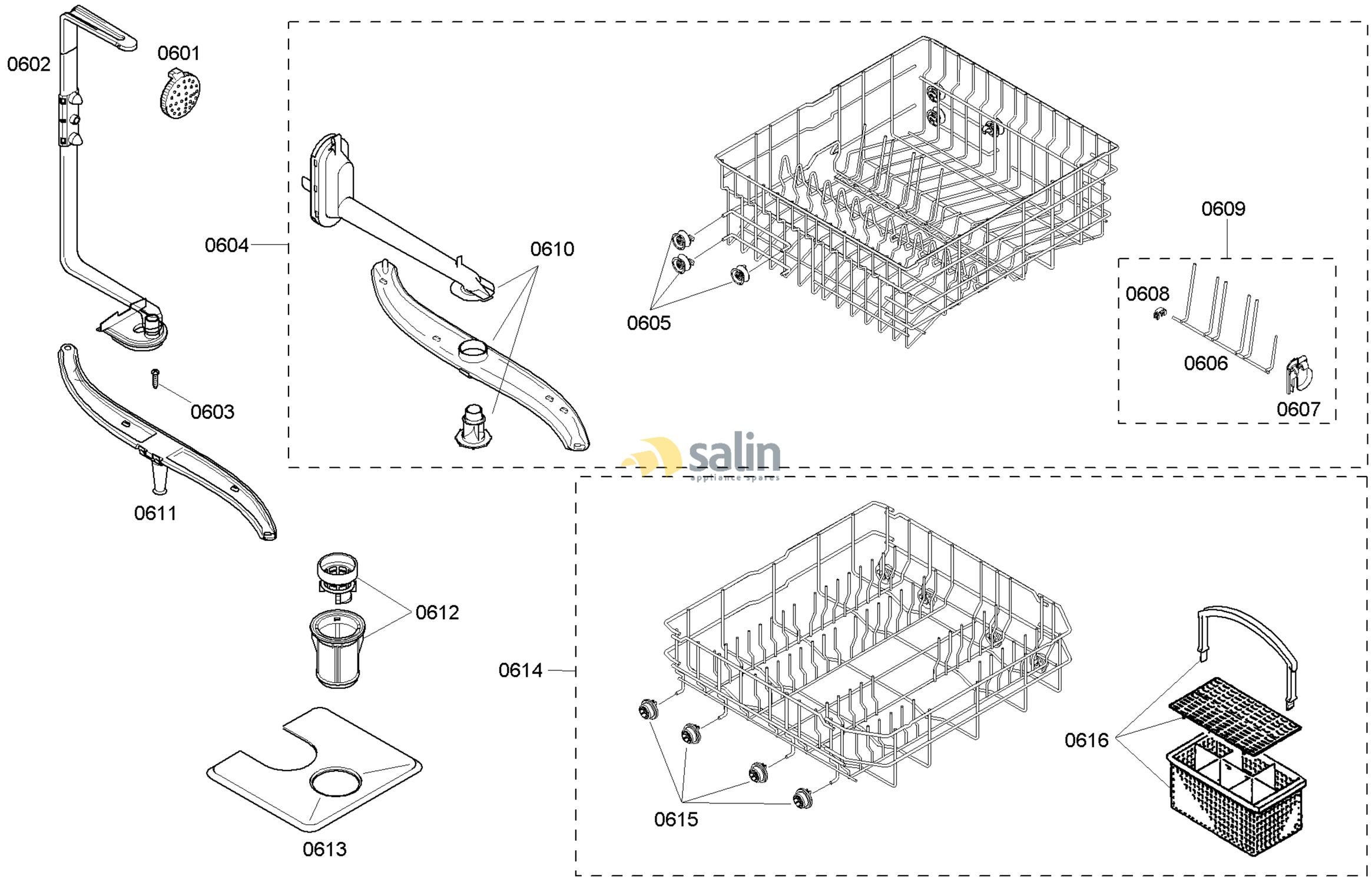

58300000119999 aet 000 b 6/6

FAMILY : SHX33A06UC
MODEL NO: SHX33A06UC/40
Check Position No/Part No or Replacement No