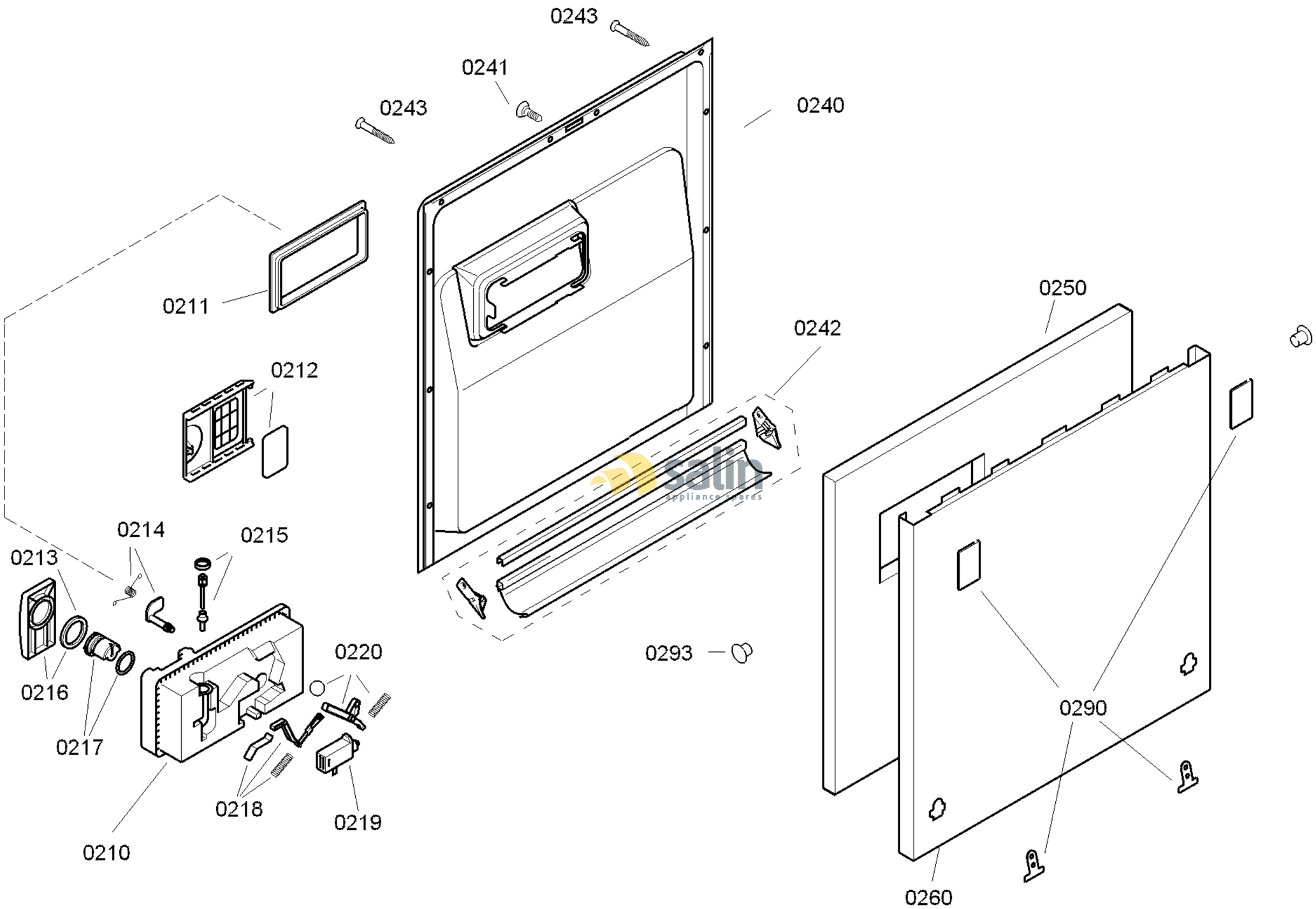

58300000116027 aet 000 d 2/6

FAMILY : SGV55M73EU
MODEL NO: SGV55M73EU/72
Check Position No/Part No or Replacement No

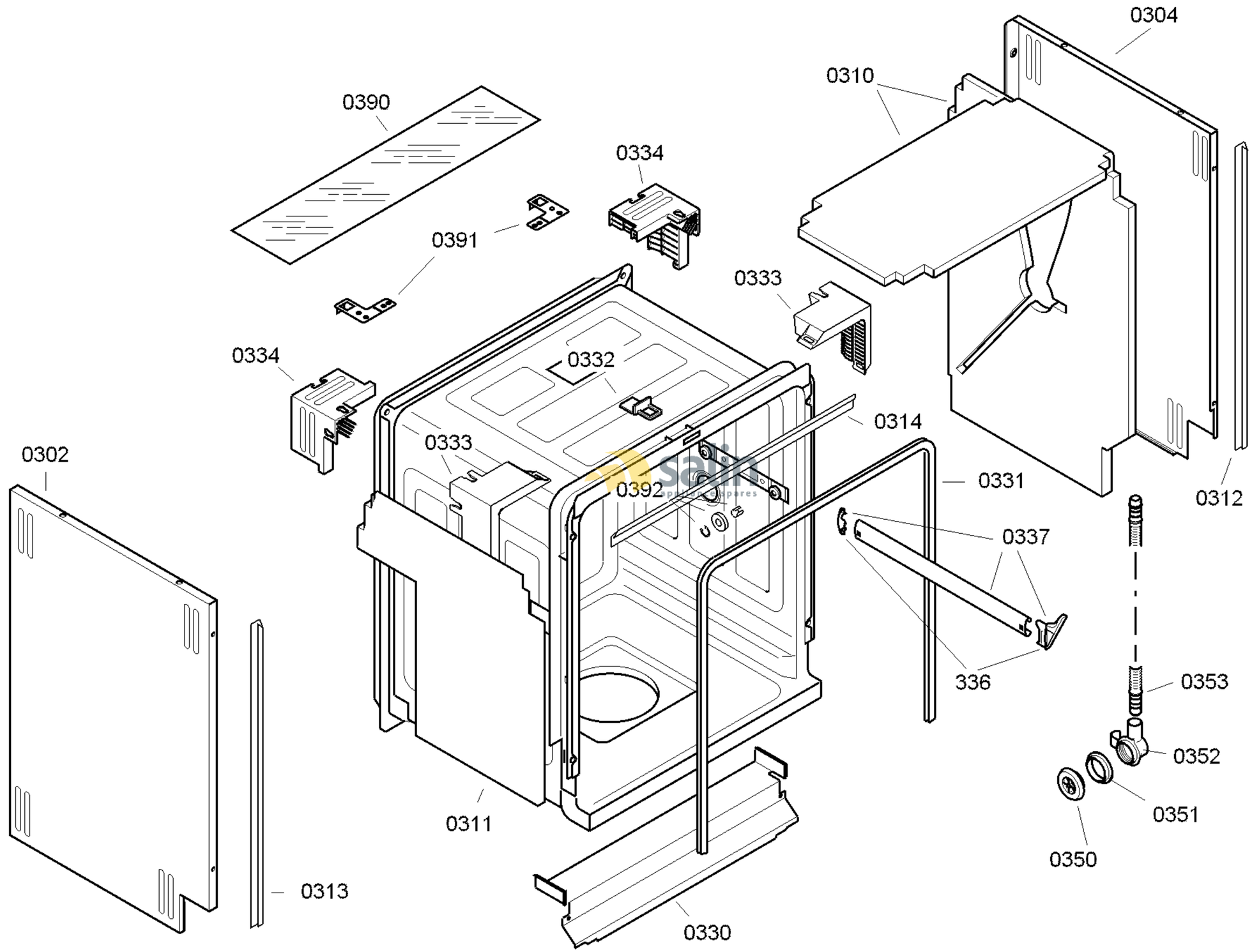

58300000116027 aet 000 d 3/6

FAMILY : SGV55M73EU
MODEL NO: SGV55M73EU/72
Check Position No/Part No or Replacement No

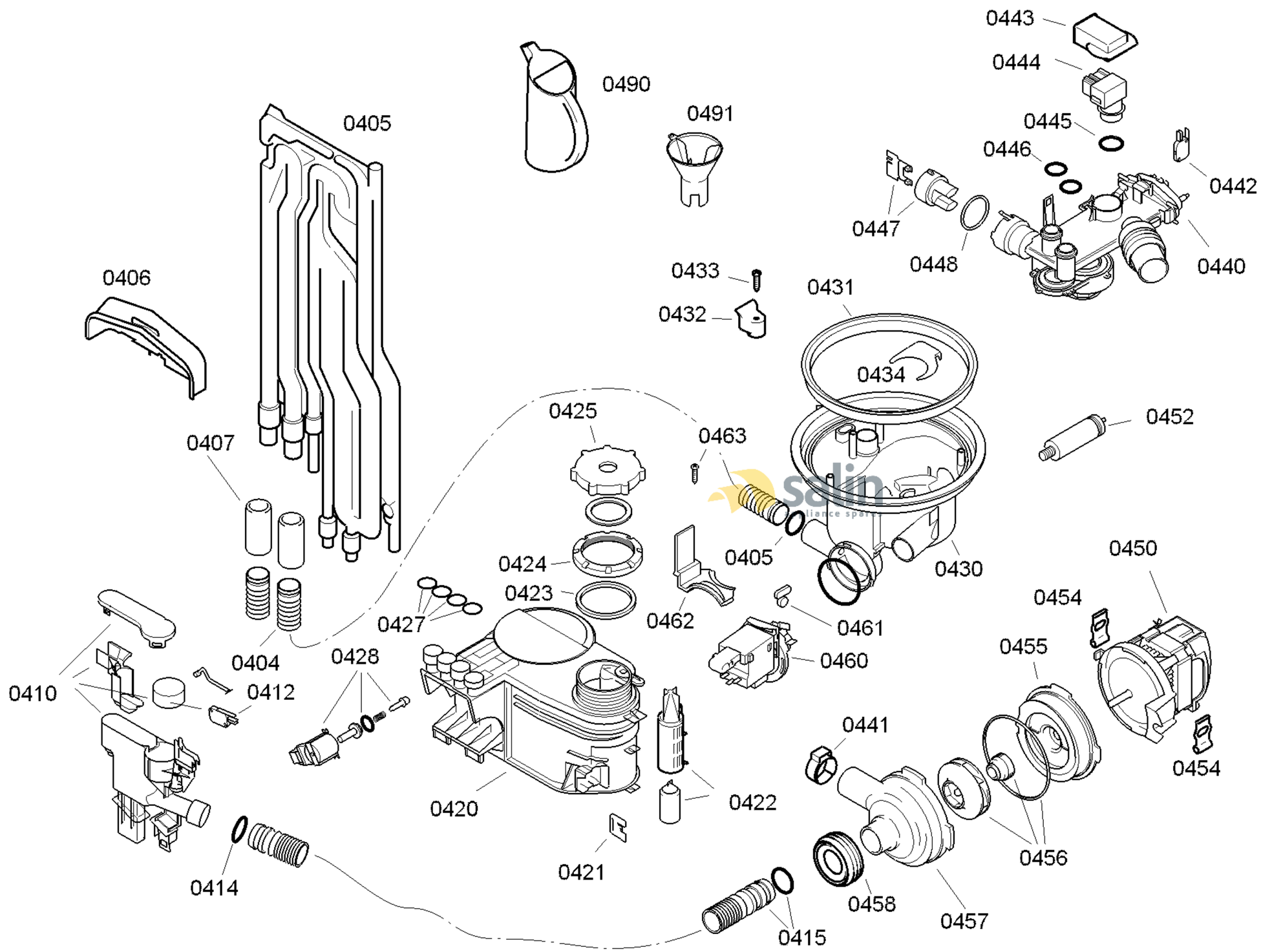

58300000116027 aet 000 d 4/6

FAMILY : SGV55M73EU
MODEL NO: SGV55M73EU/72
Check Position No/Part No or Replacement No

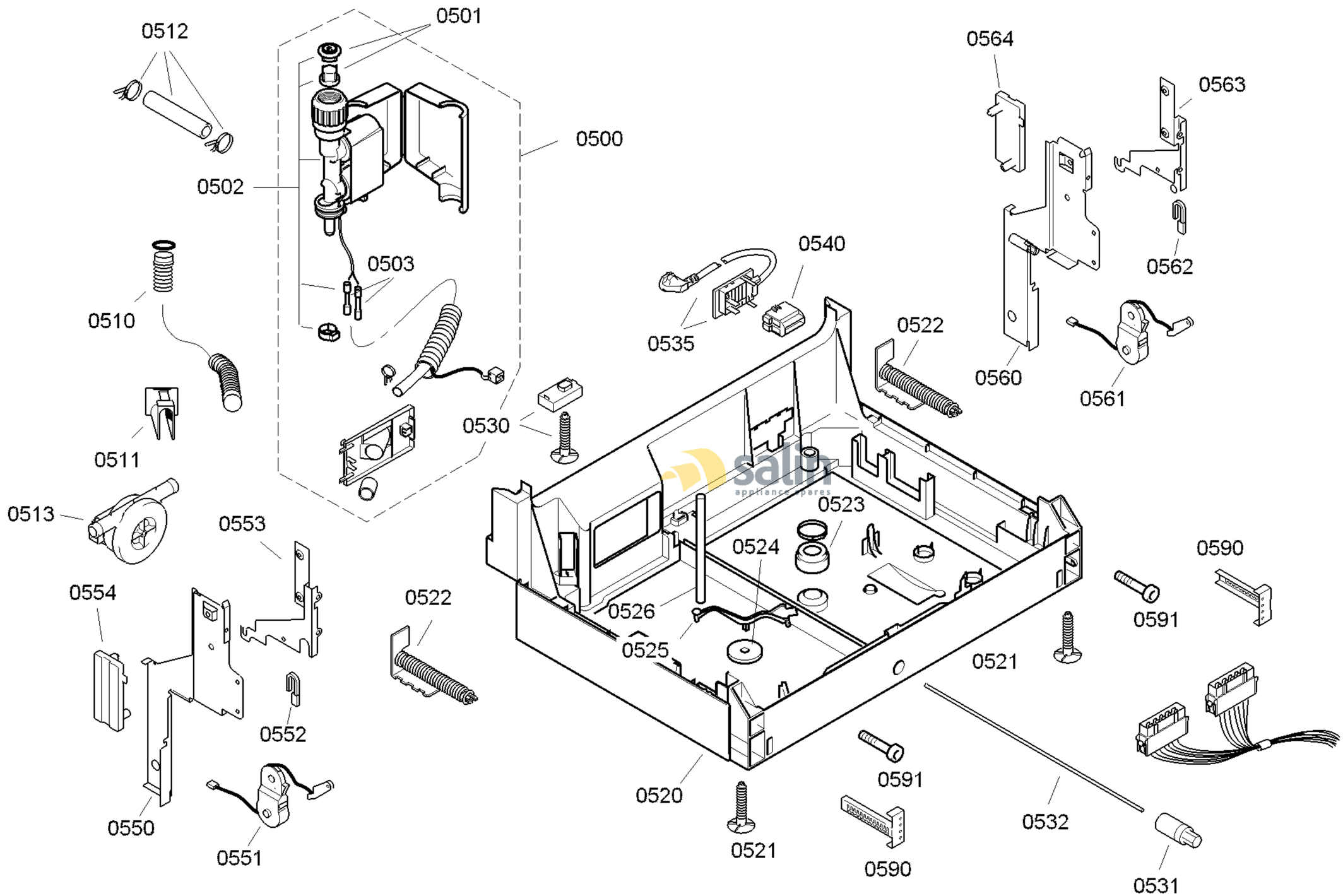

58300000116027 aet 000 d 5/6

FAMILY : SGV55M73EU
MODEL NO: SGV55M73EU/72
Check Position No/Part No or Replacement No

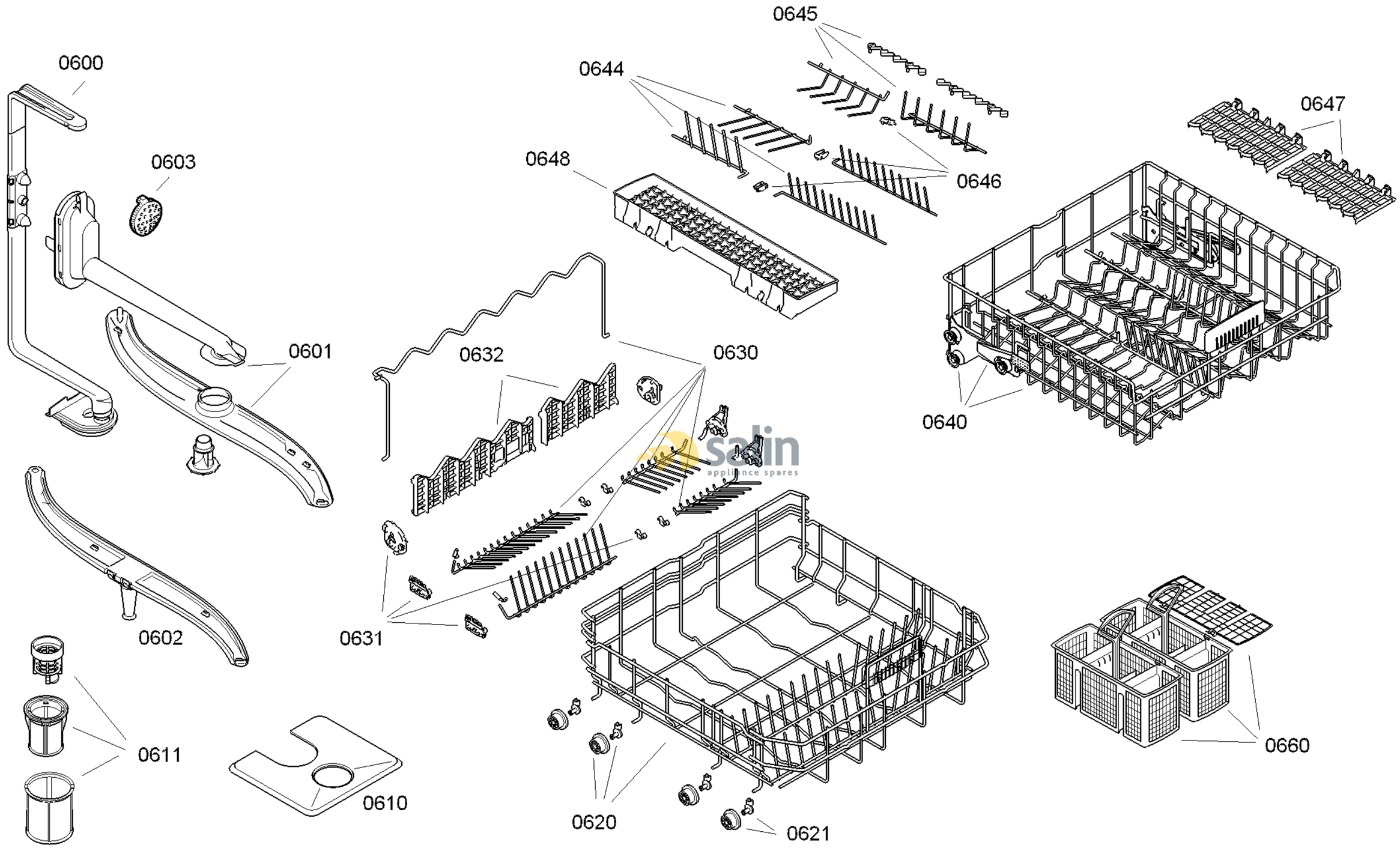

58300000116027 aet 000 d 6/6

FAMILY : SGV55M73EU
MODEL NO: SGV55M73EU/72
Check Position No/Part No or Replacement No