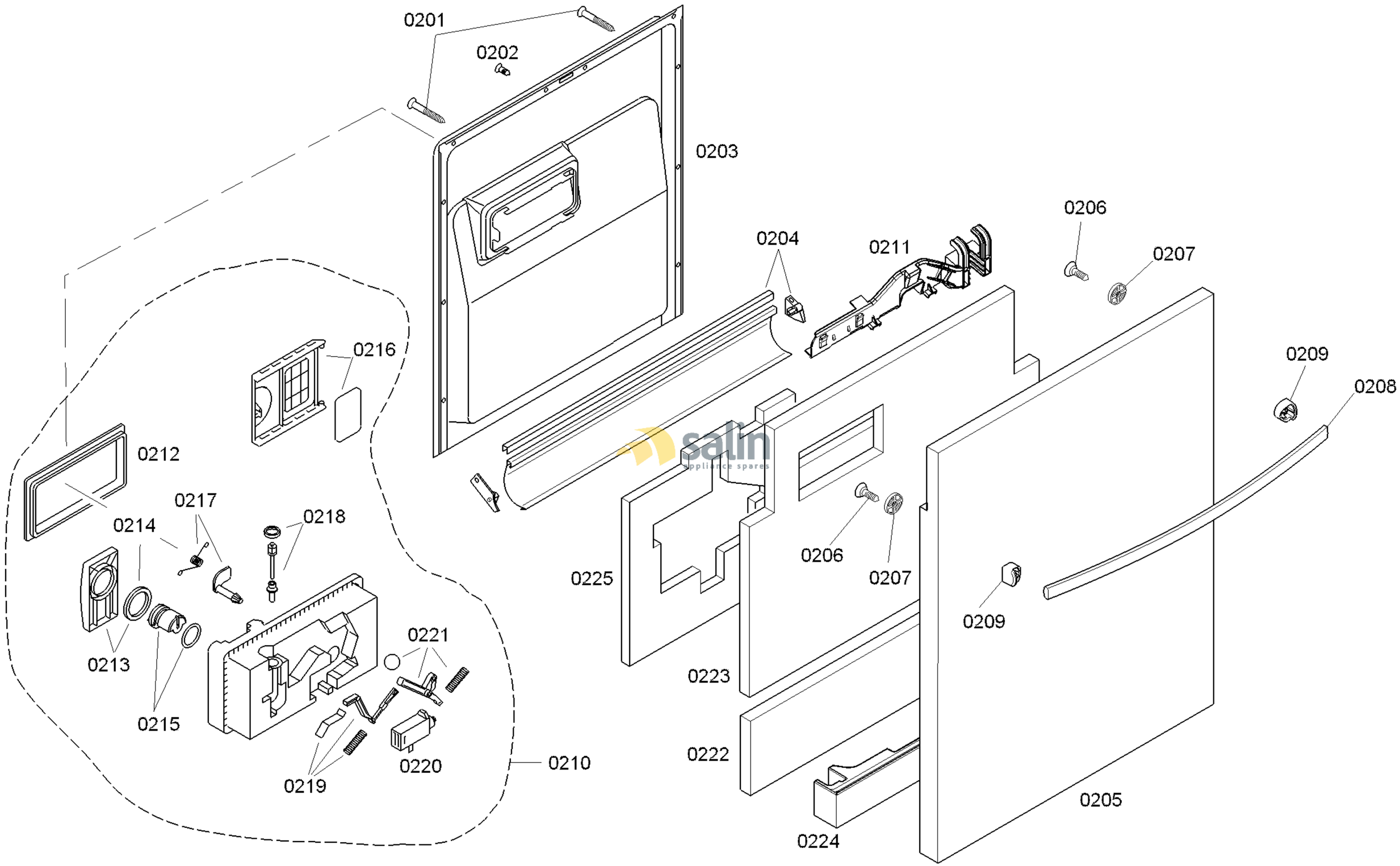

58300000129501 aet 000 f 2/6

FAMILY : SHX43M05UC
MODEL NO: SHX43M05UC/48
Check Position No/Part No or Replacement No

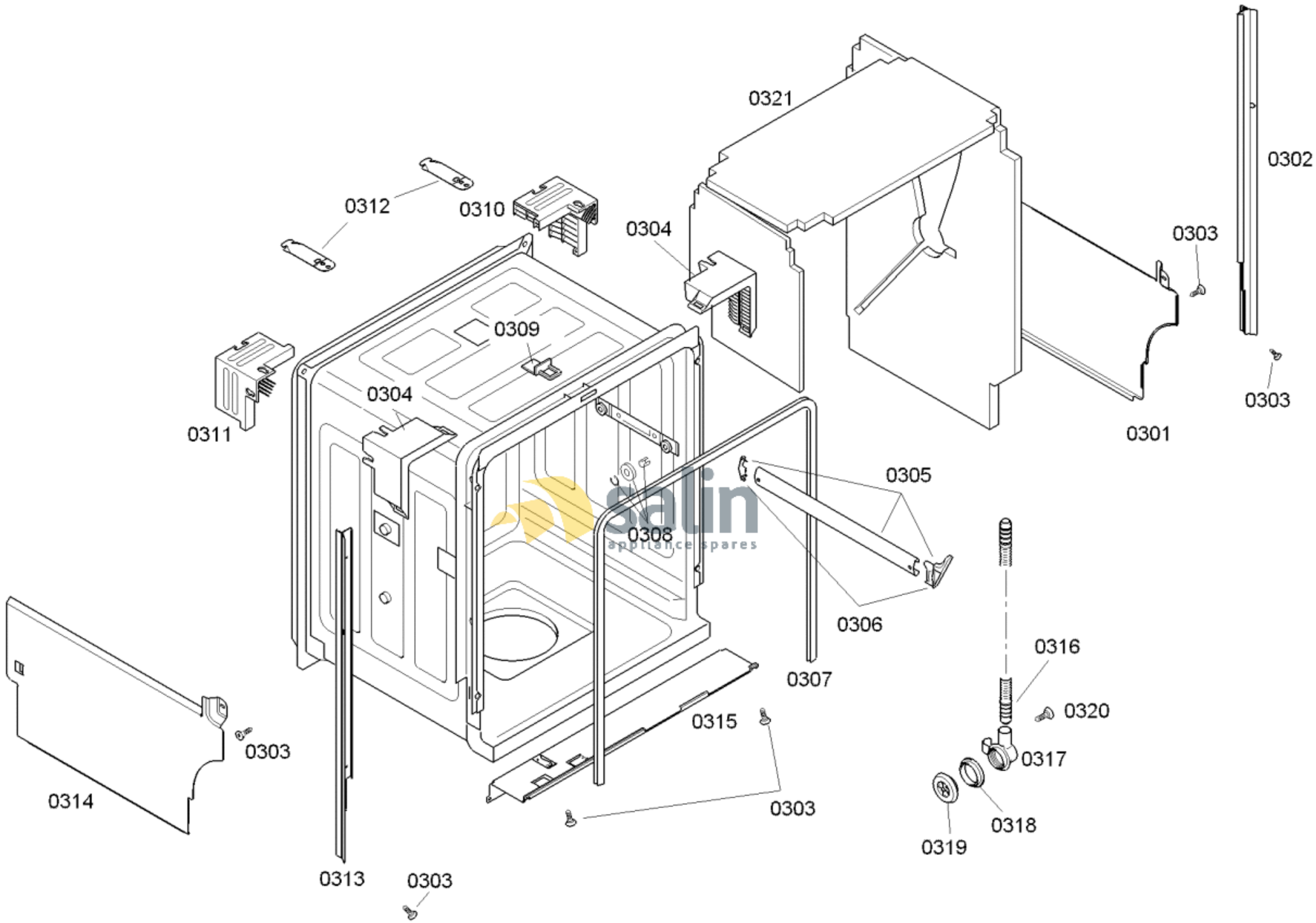

58300000129501 aet 000 f 3/6

FAMILY : SHX43M05UC

MODEL NO: SHX43M05UC/48

Check Position No/Part No or Replacement No

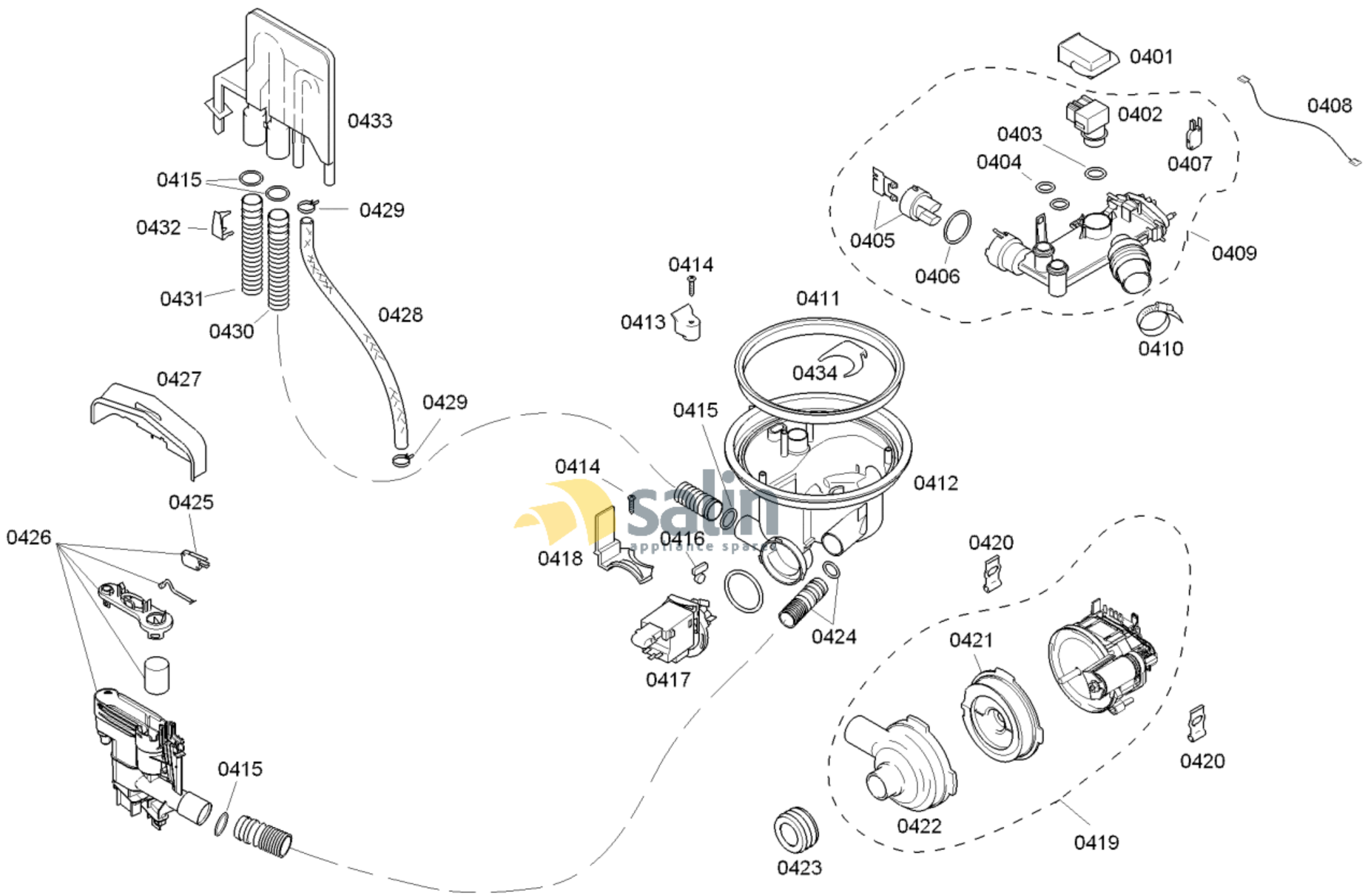

58300000129501 aet 000 f 4/6

FAMILY : SHX43M05UC

MODEL NO: SHX43M05UC/48

Check Position No/Part No or Replacement No

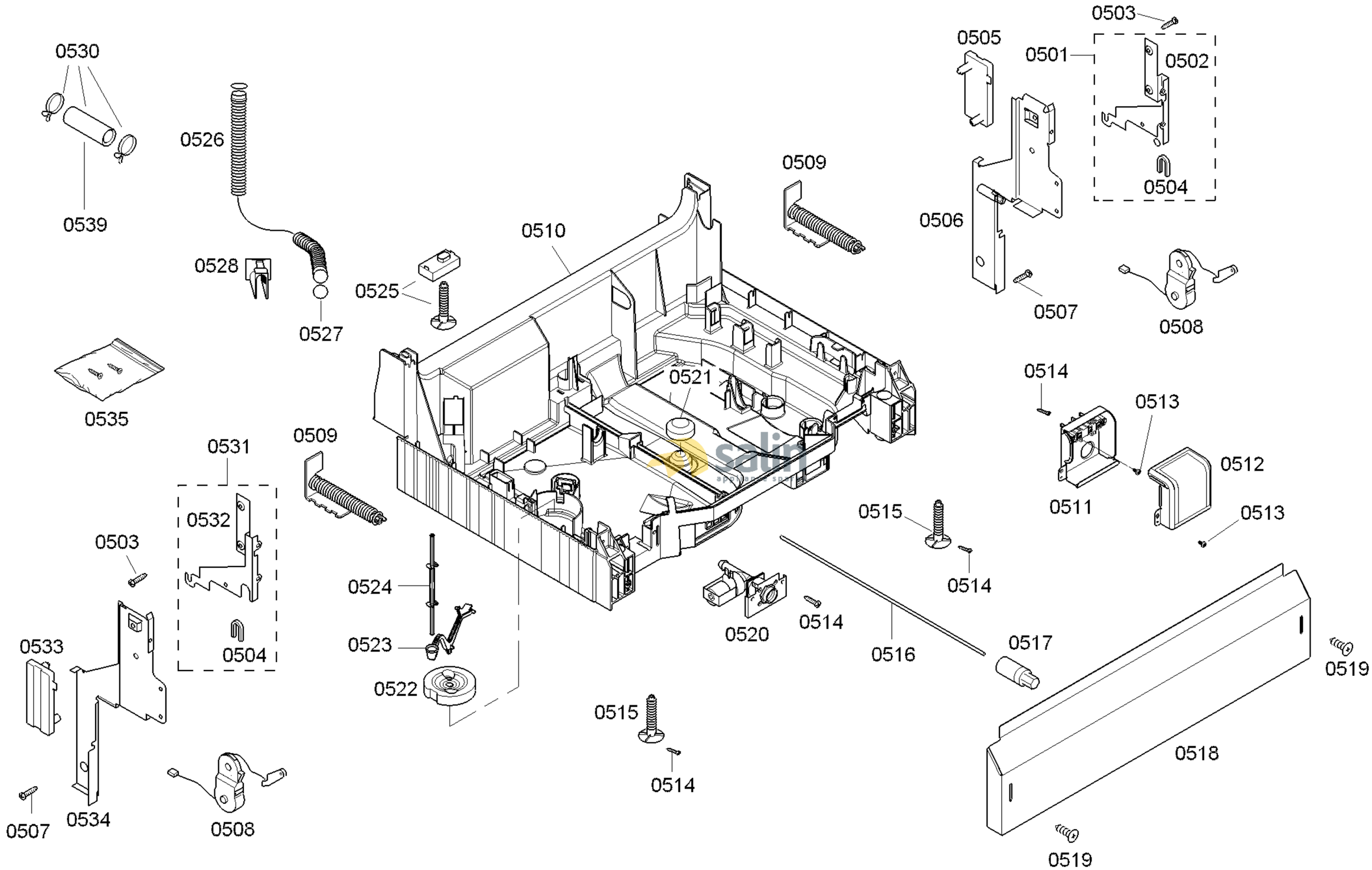

58300000129501 aet 000 f 5/6

FAMILY : SHX43M05UC
MODEL NO: SHX43M05UC/48
Check Position No/Part No or Replacement No

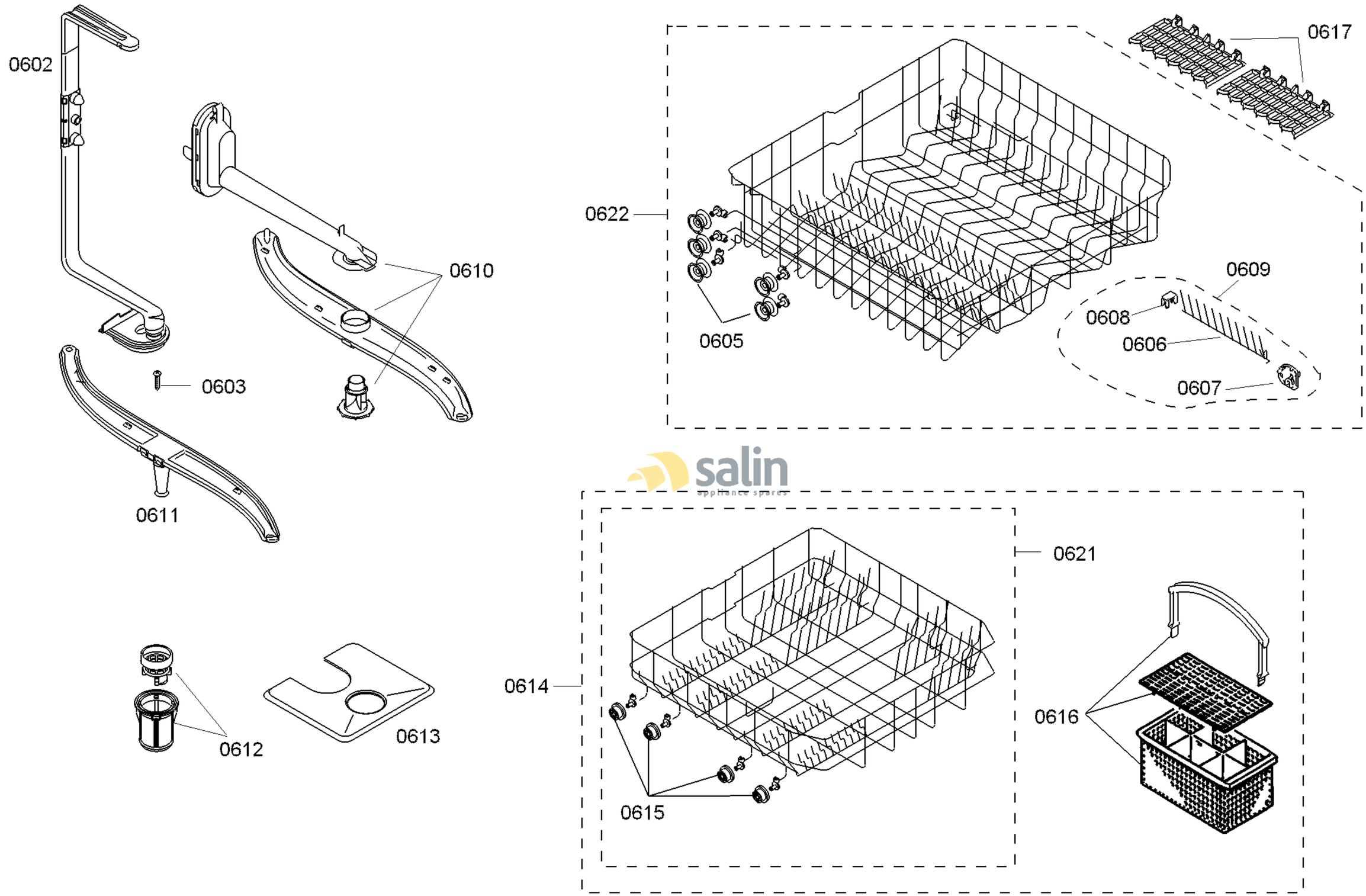

salin
appliance spares

58300000129501 aet 000 f 6/6

FAMILY : SHX43M05UC
MODEL NO: SHX43M05UC/48
Check Position No/Part No or Replacement No