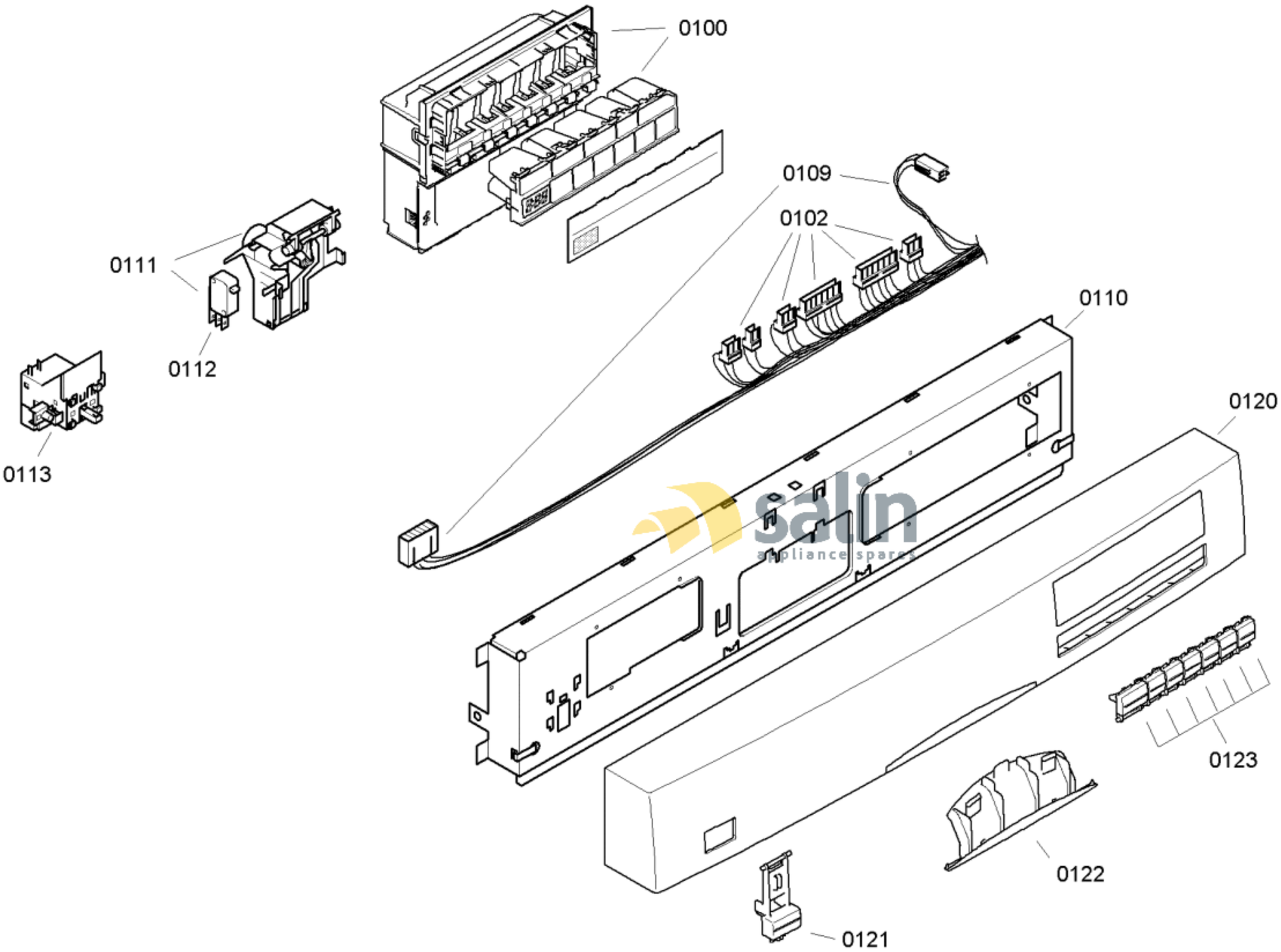

58300000125441 aet 000 a 1/6

FAMILY : SGS47M72II

MODEL NO: SGS47M72II/45

Check Position No/Part No or Replacement No

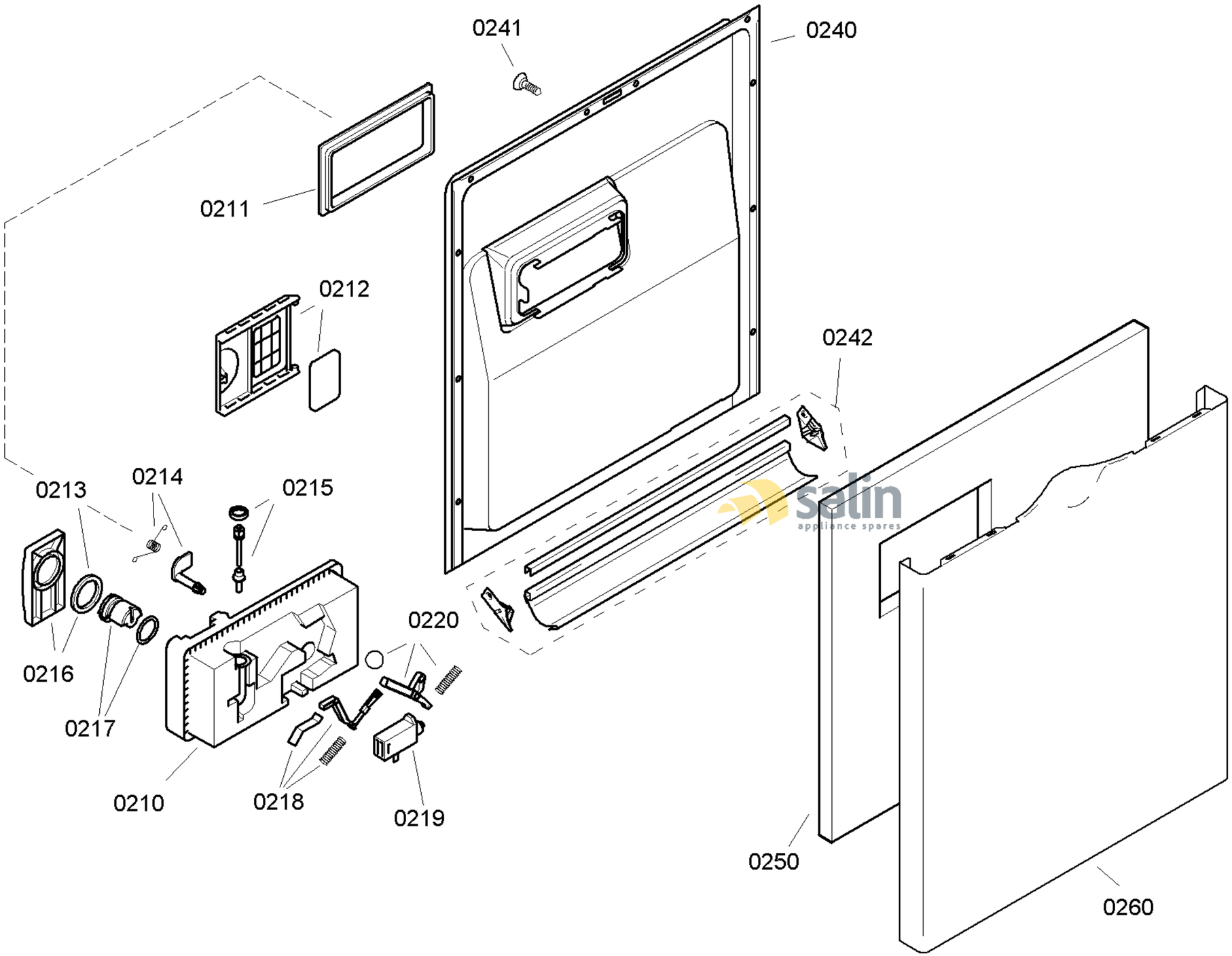

58300000125441 aet 000 a 2/6

FAMILY : SGS47M72II
MODEL NO: SGS47M72II/45
Check Position No/Part No or Replacement No

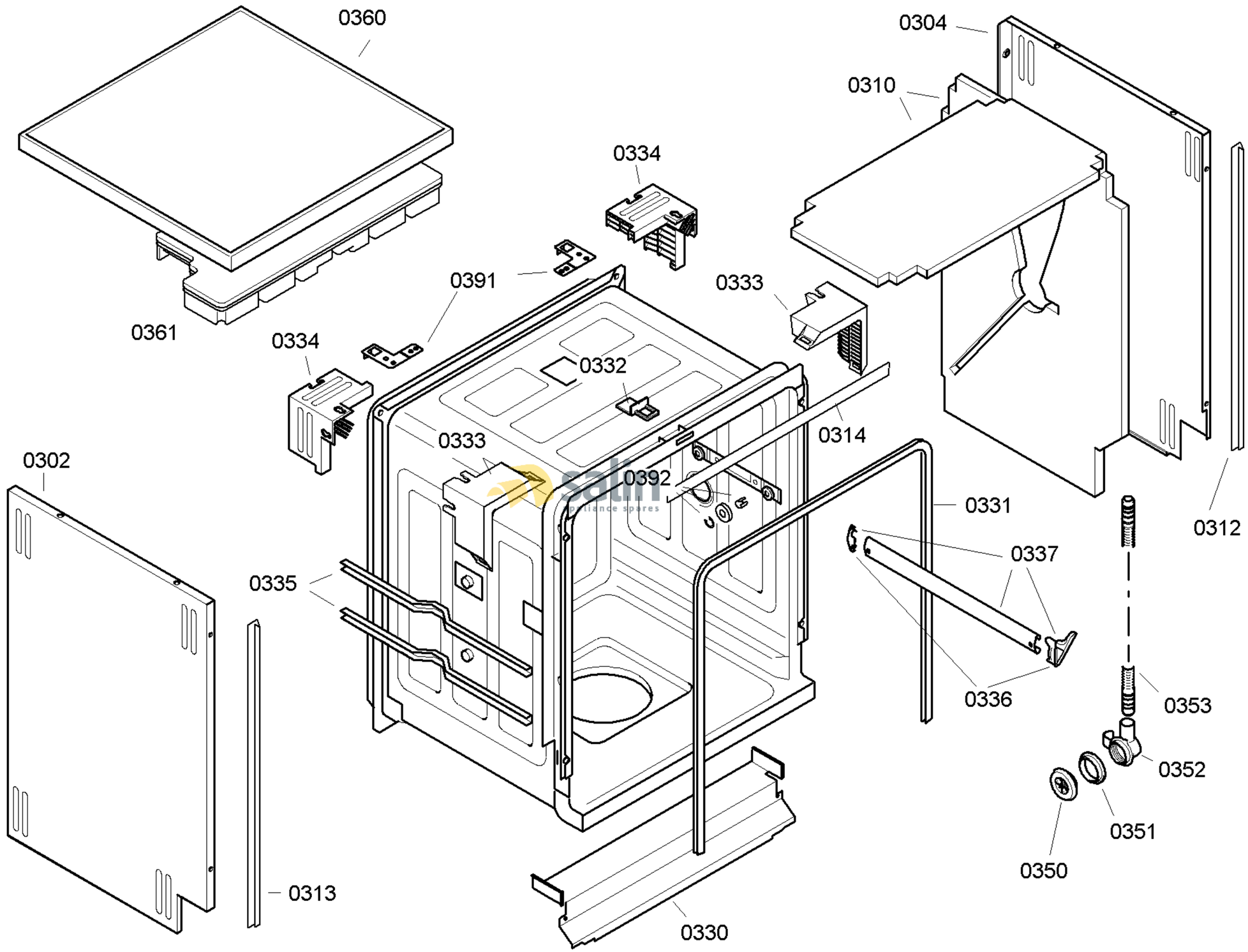

58300000125441 aet 000 a 3/6

FAMILY : SGS47M72II
MODEL NO: SGS47M72II/45
Check Position No/Part No or Replacement No

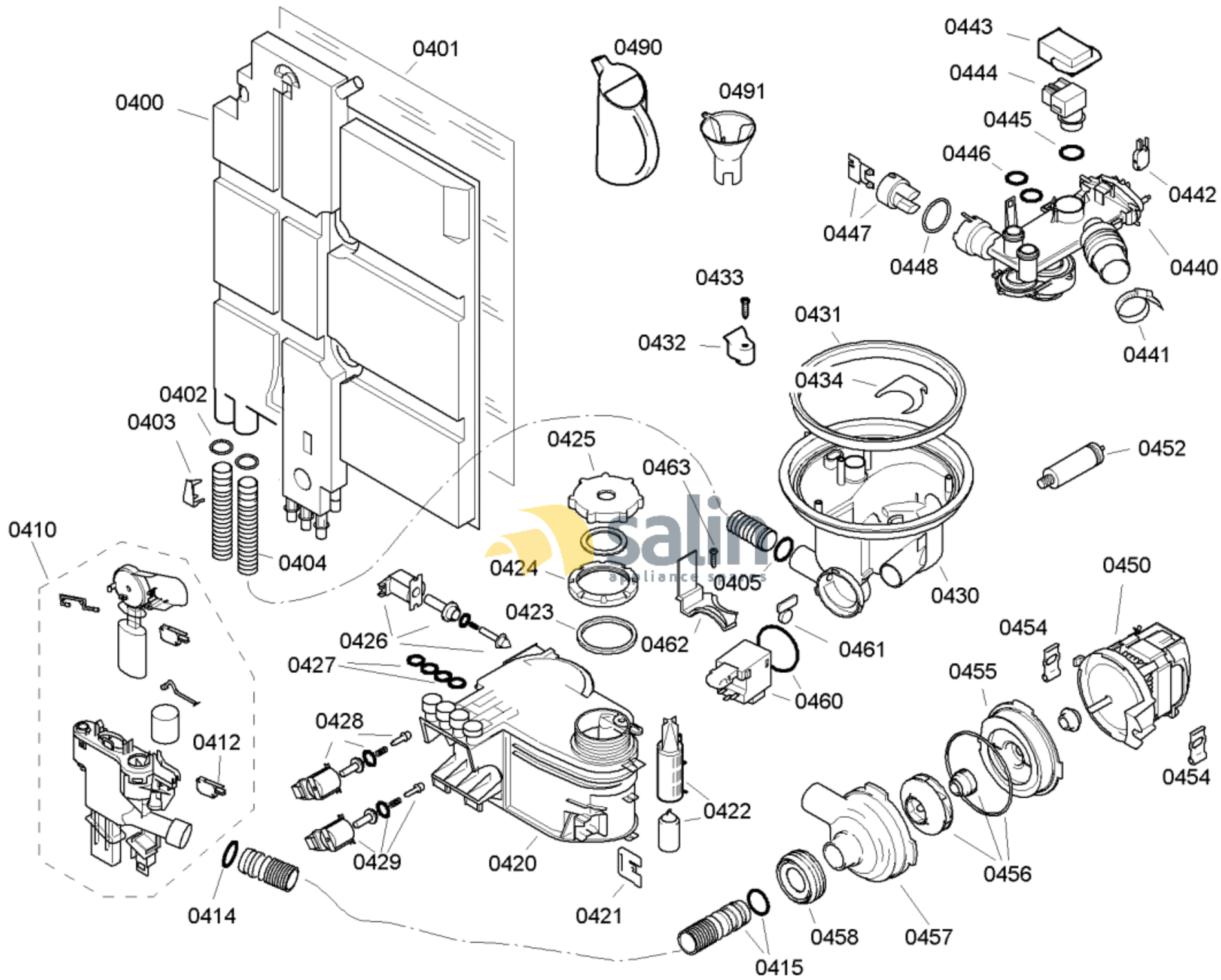

58300000125441 aet 000 a 4/6

FAMILY : SGS47M72II

MODEL NO: SGS47M72II/45

Check Position No/Part No or Replacement No

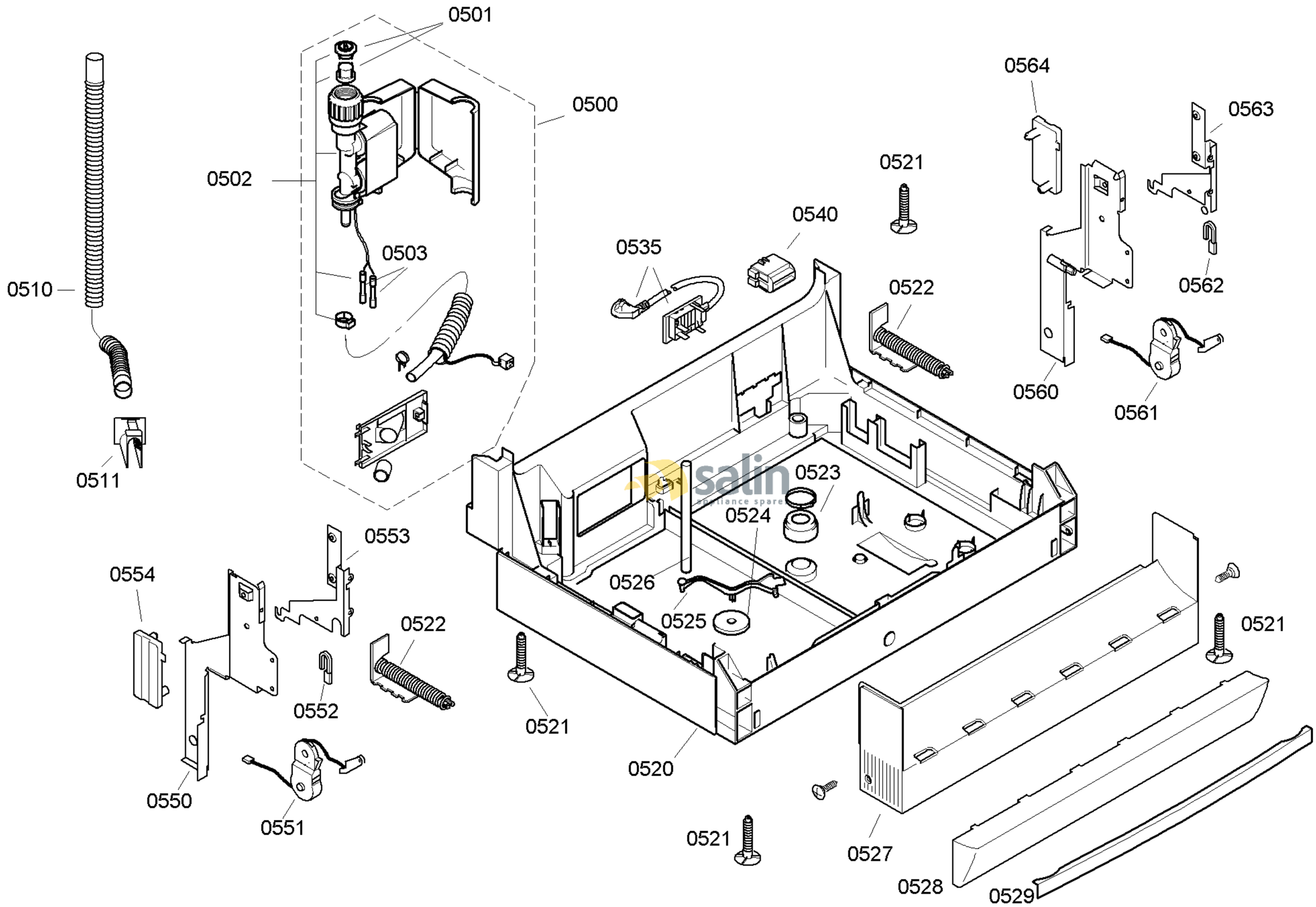

58300000125441 aet 000 a 5/6

FAMILY : SGS47M72II
MODEL NO: SGS47M72II/45
Check Position No/Part No or Replacement No

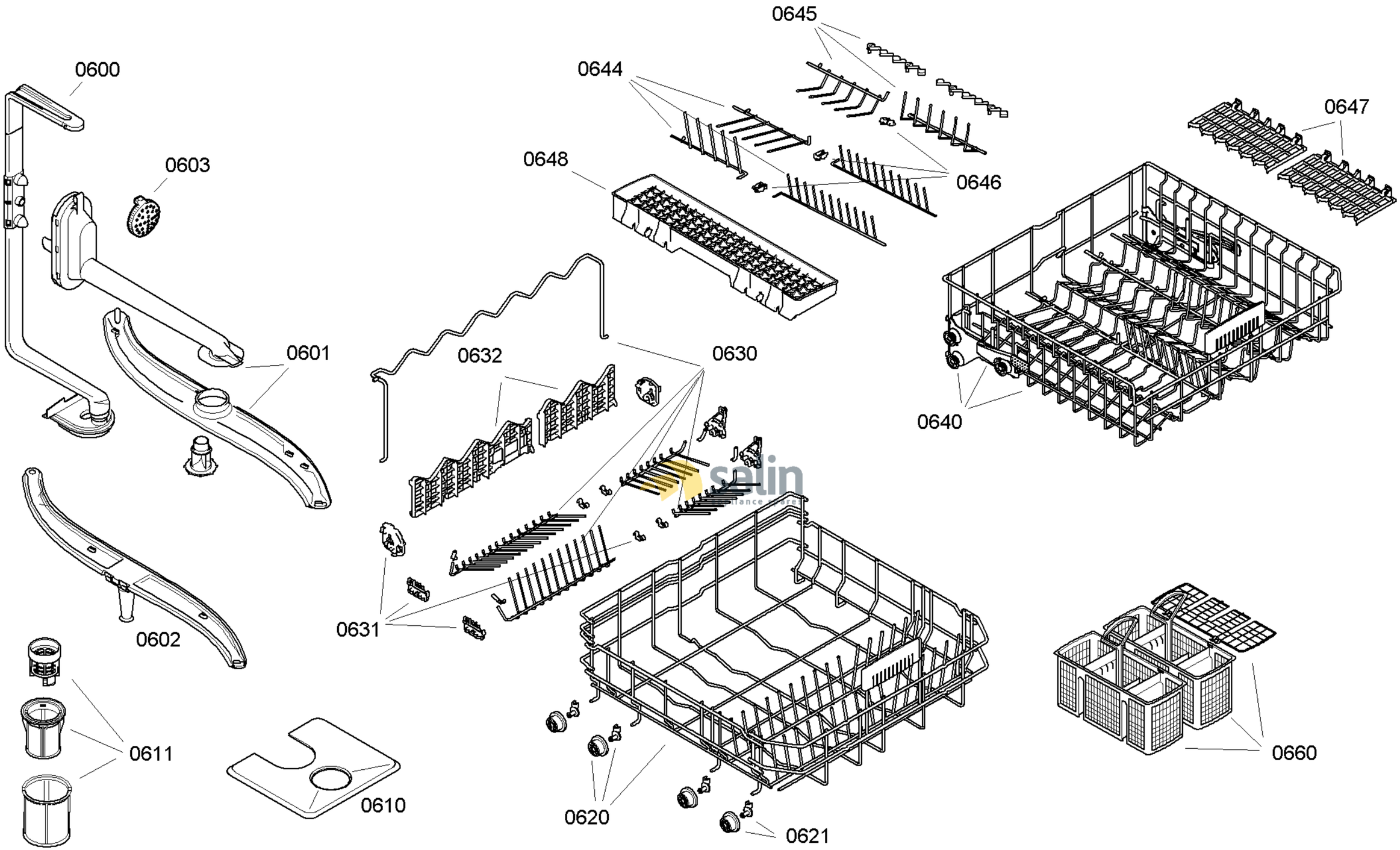

58300000125441 aet 000 a 6/6

FAMILY : SGS47M72II
MODEL NO: SGS47M72II/45
Check Position No/Part No or Replacement No