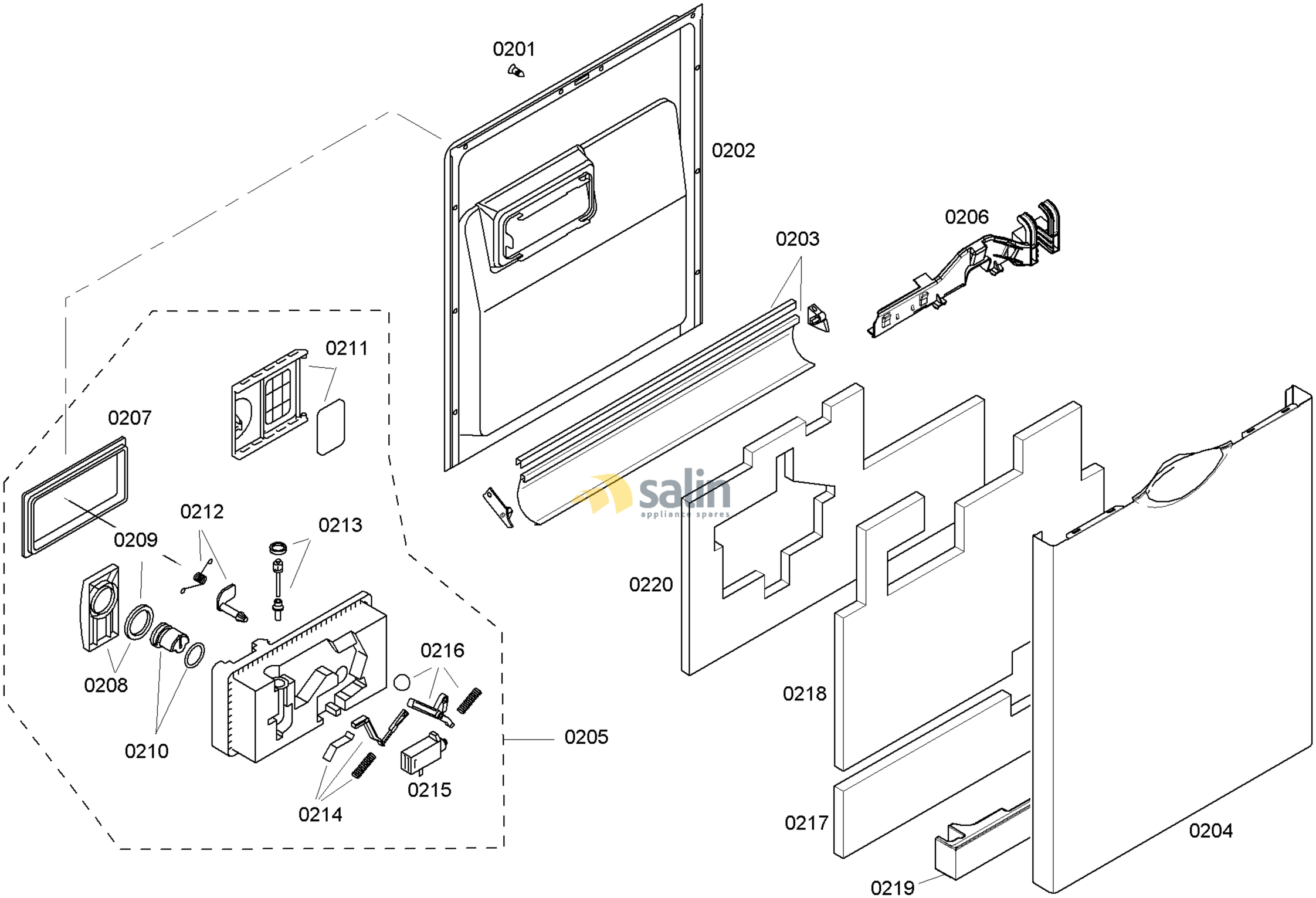

58300000125402 aet 000 a 2/6

FAMILY : SHE43M05UC
MODEL NO: SHE43M05UC/47
Check Position No/Part No or Replacement No

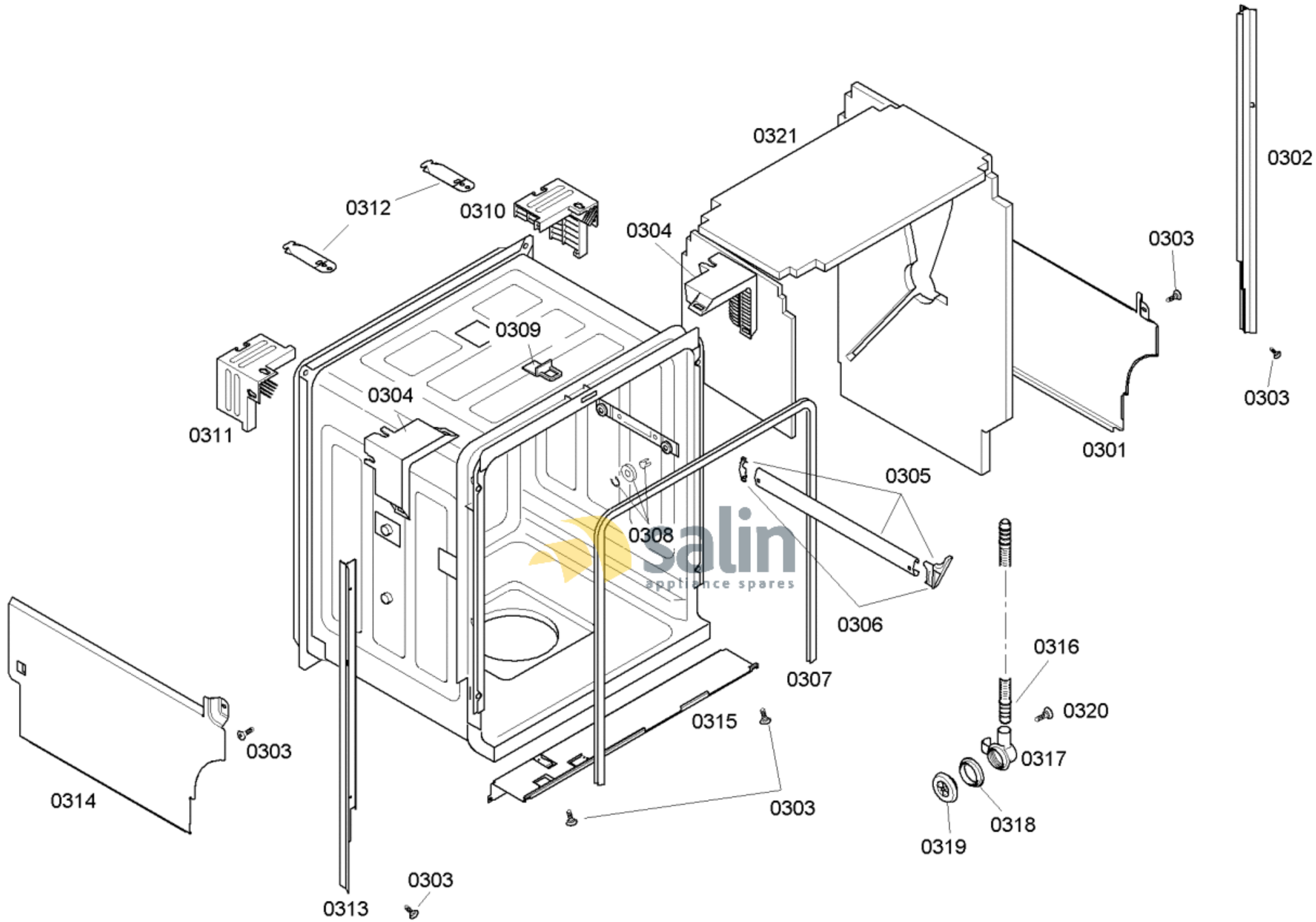

58300000125402 aet 000 a 3/6

FAMILY : SHE43M05UC

MODEL NO: SHE43M05UC/47

Check Position No/Part No or Replacement No

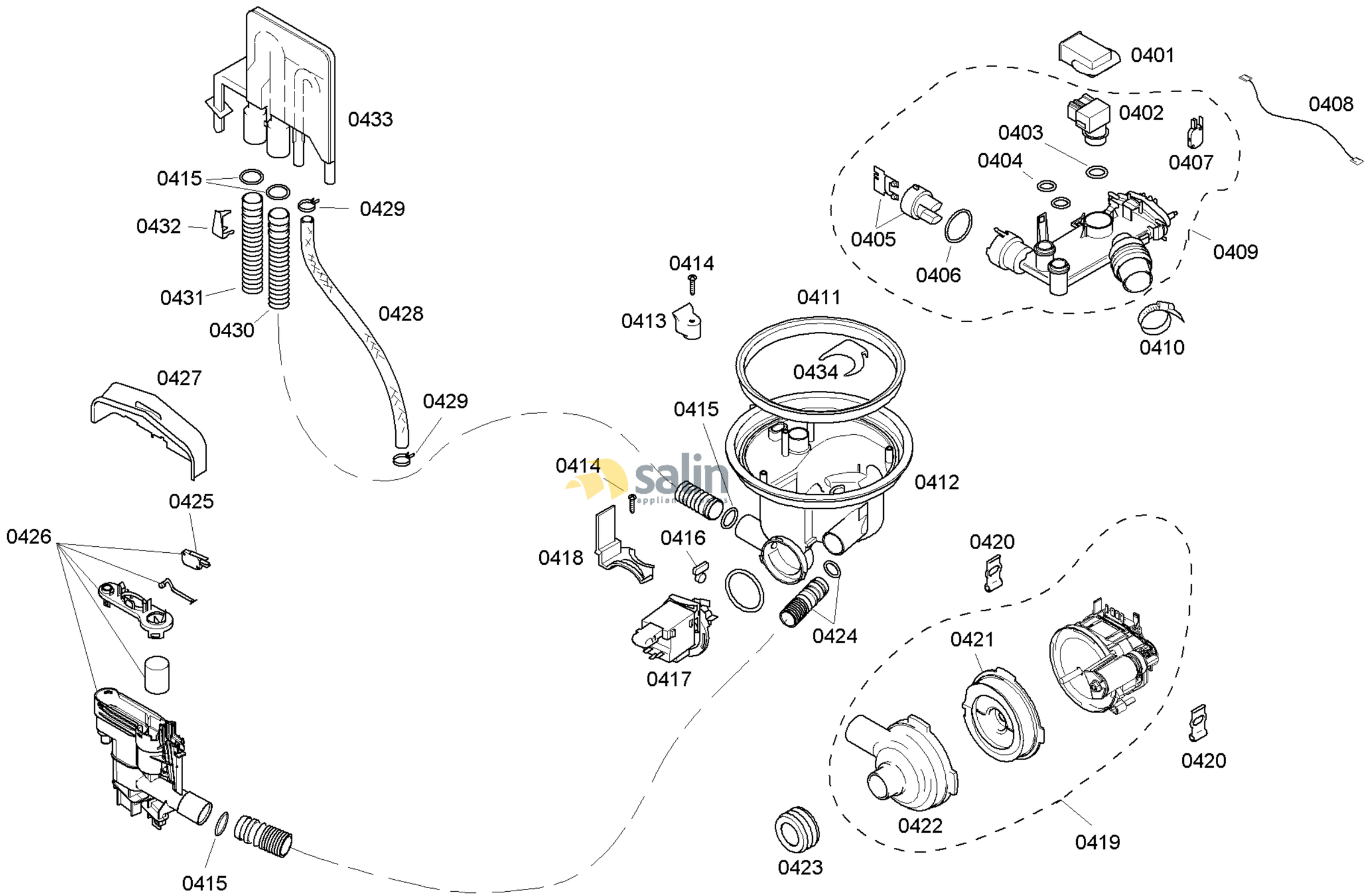

58300000125402 aet 000 a 4/6

FAMILY : SHE43M05UC
MODEL NO: SHE43M05UC/47
Check Position No/Part No or Replacement No

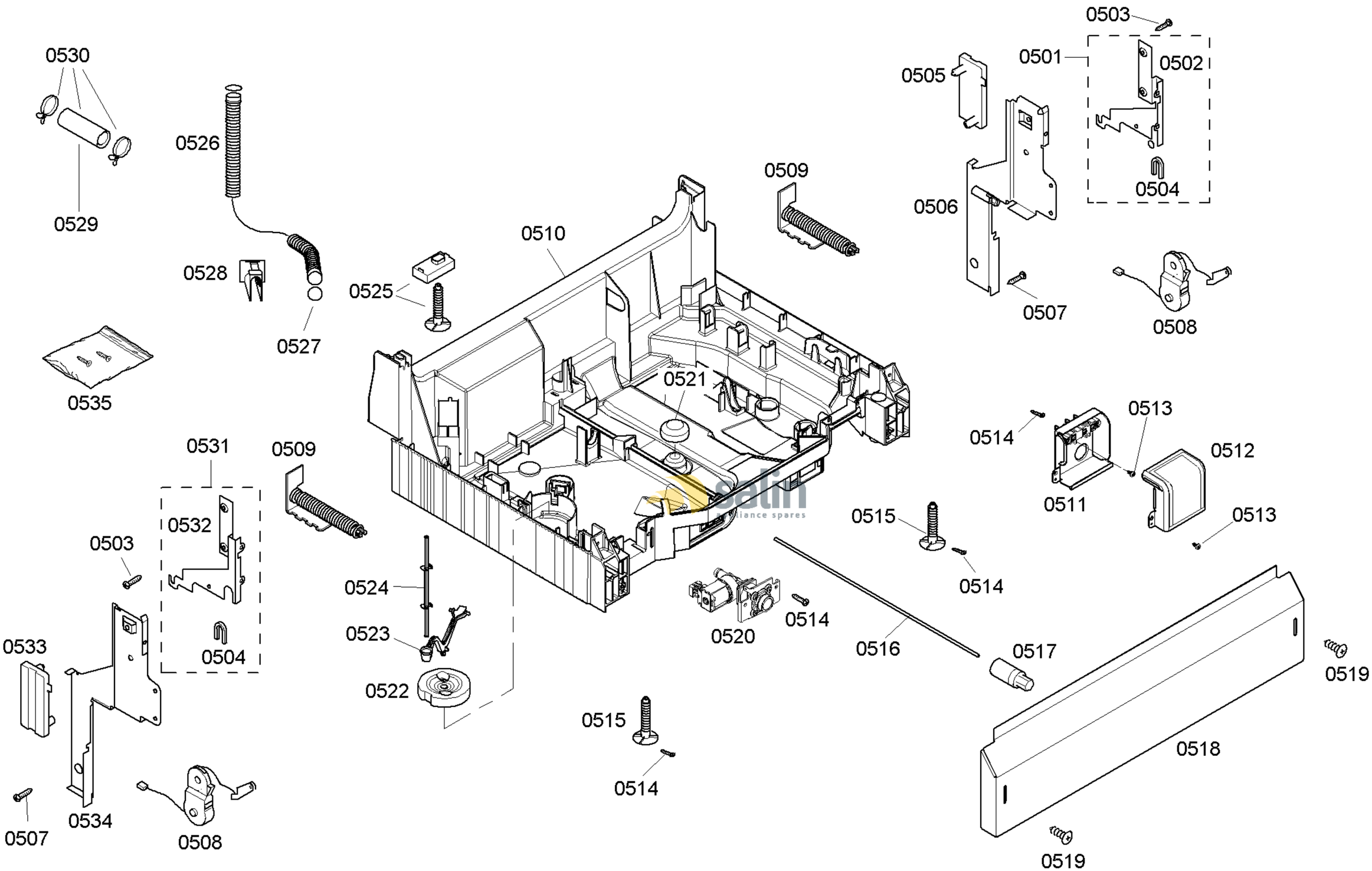

58300000125402 aet 000 a 5/6

FAMILY : SHE43M05UC
MODEL NO: SHE43M05UC/47
Check Position No/Part No or Replacement No

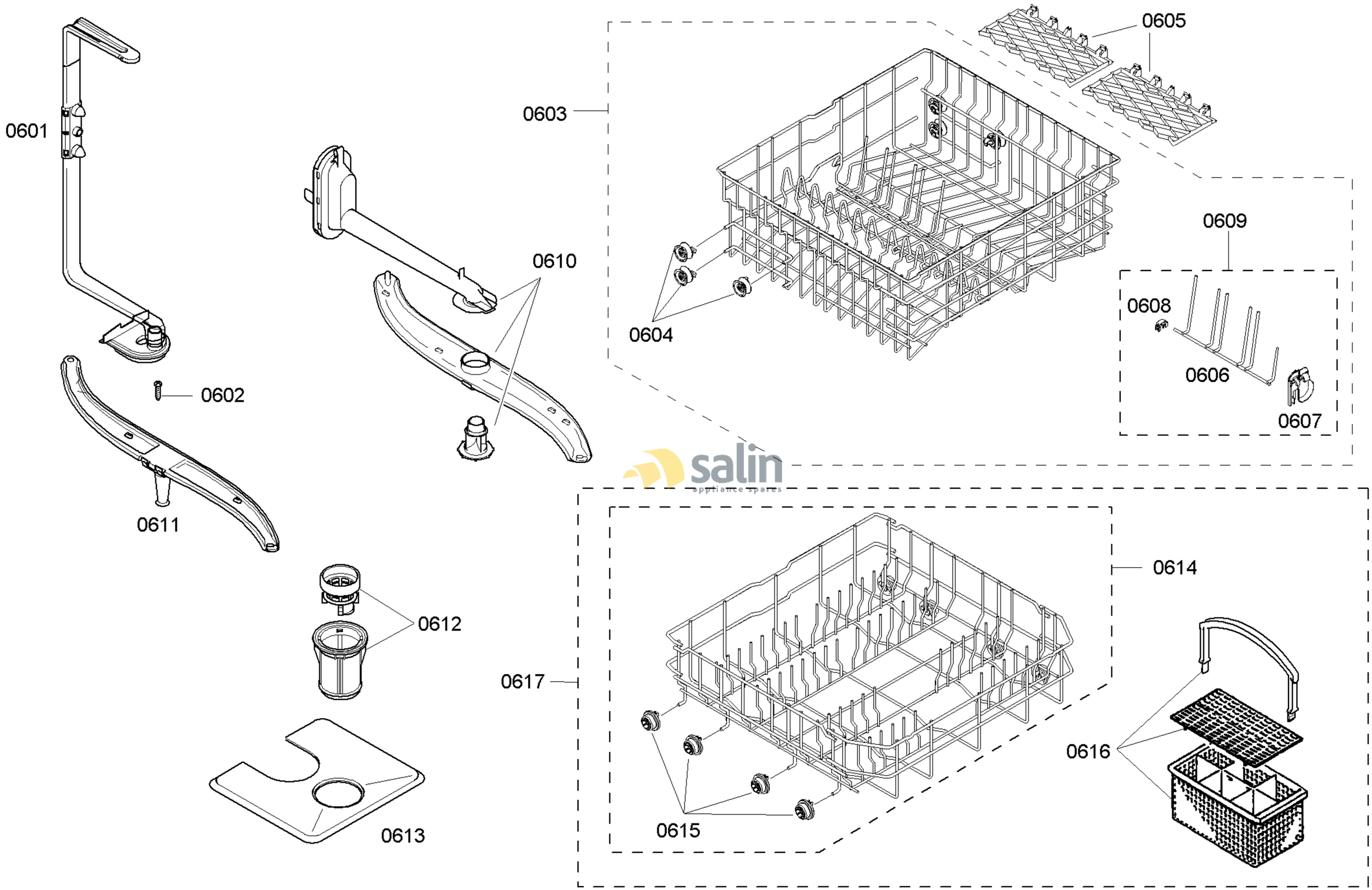

58300000125402 aet 000 a 6/6

FAMILY : SHE43M05UC
MODEL NO: SHE43M05UC/47
Check Position No/Part No or Replacement No