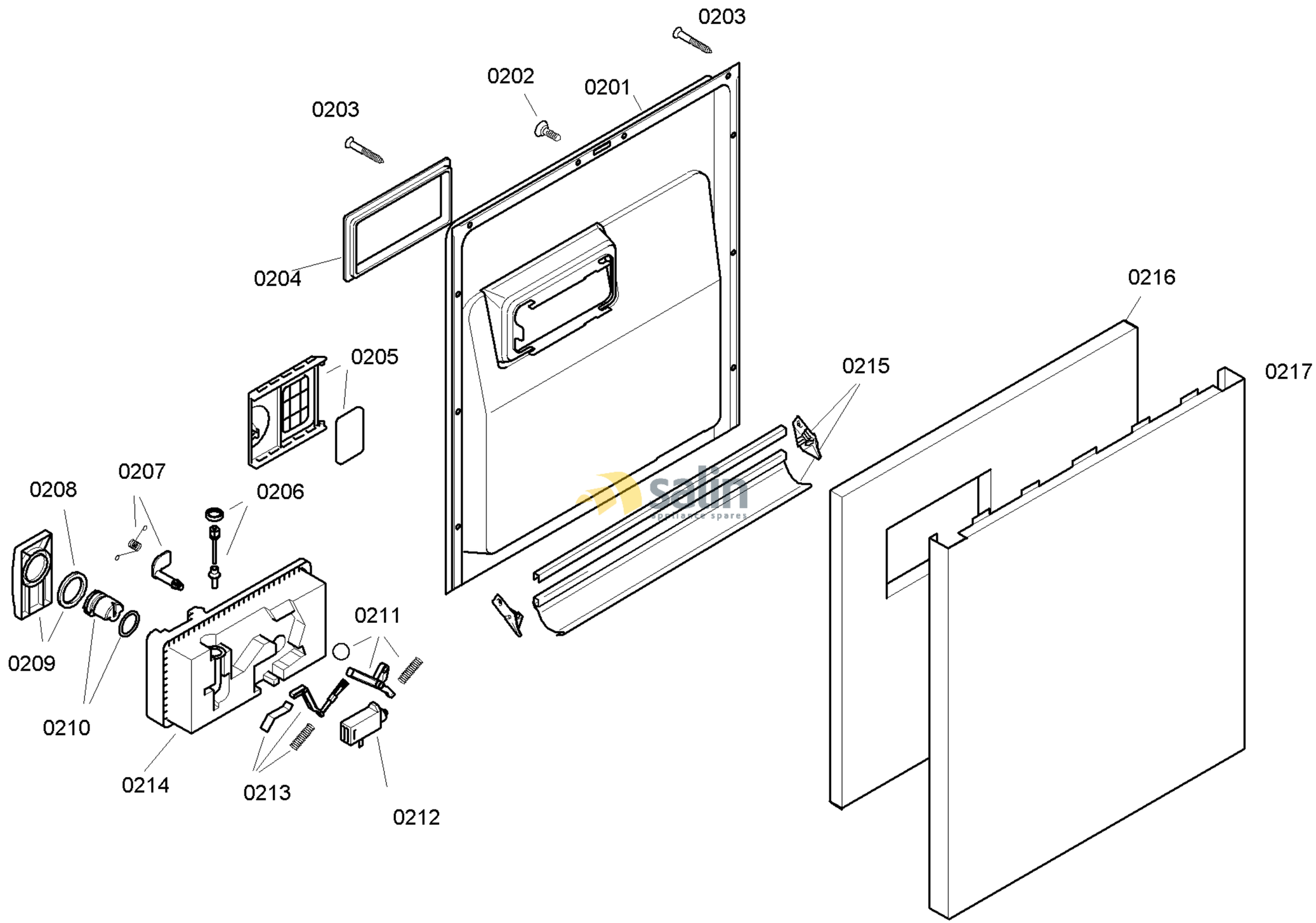

58300000130661 aet 000 a 2/6

FAMILY : SGS55E08BR
MODEL NO: SGS55E08BR/84
Check Position No/Part No or Replacement No

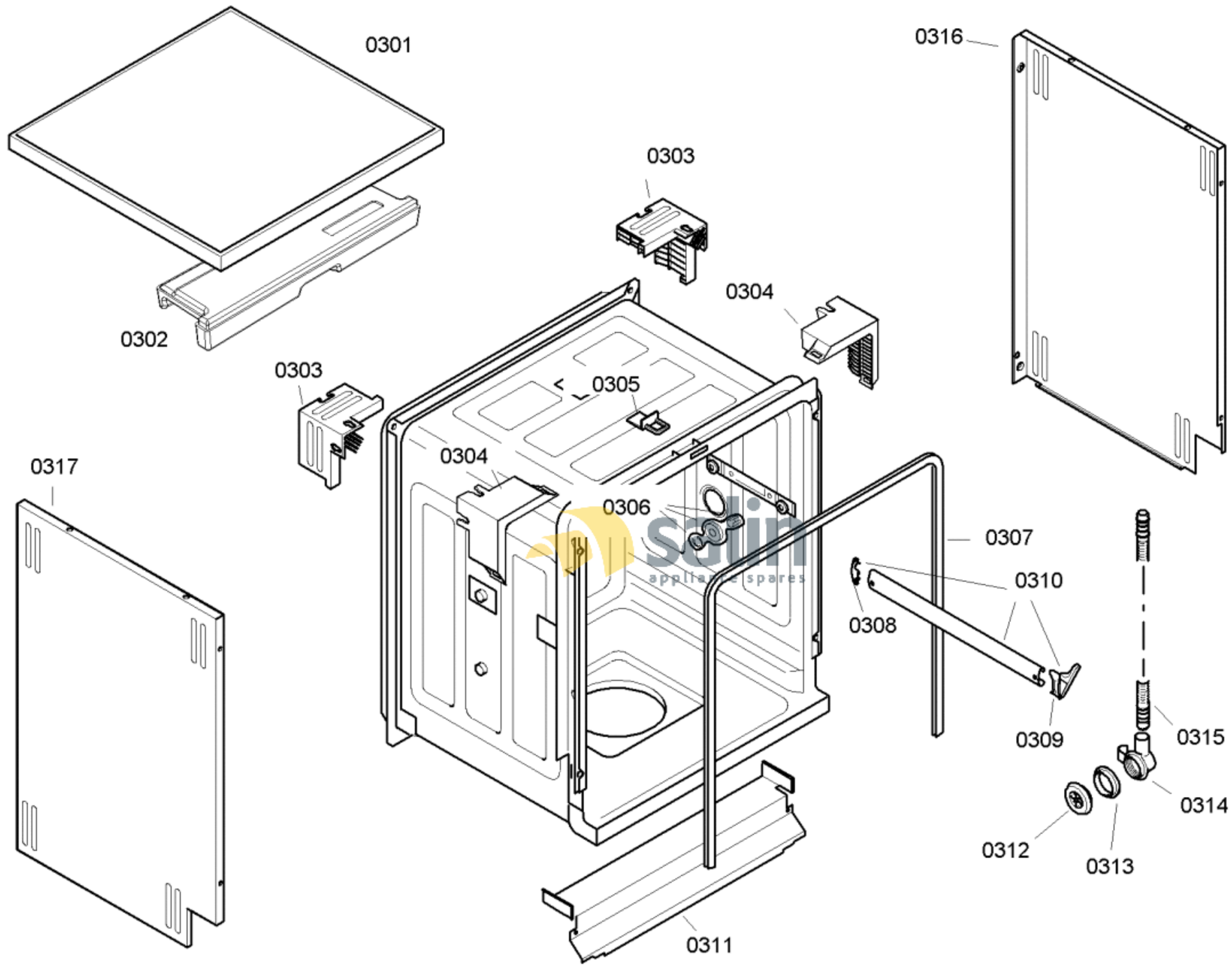

58300000130661 aet 000 a 3/6

FAMILY : SGS55E08BR

MODEL NO: SGS55E08BR/84

Check Position No/Part No or Replacement No

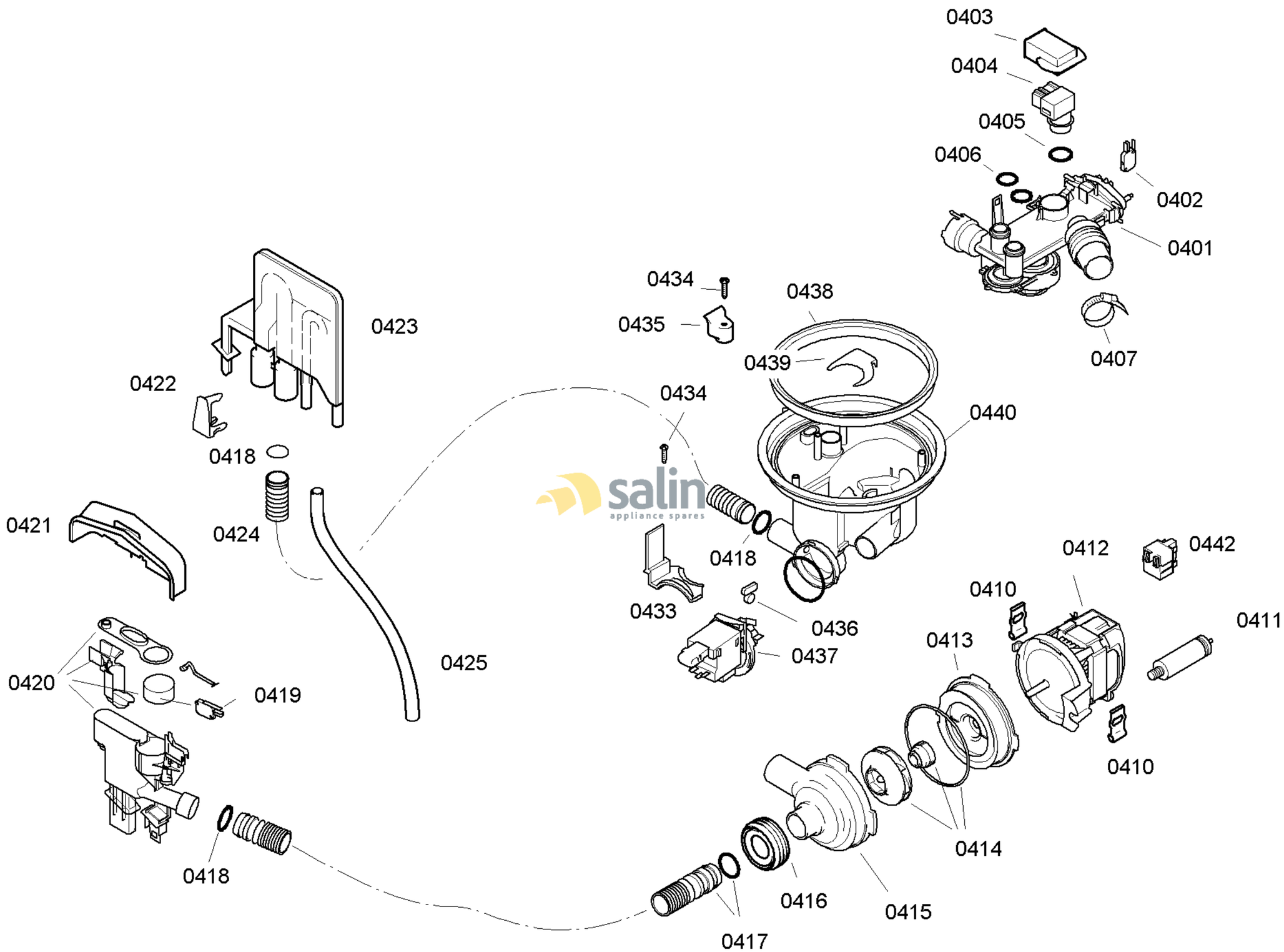

58300000130661 aet 000 a 4/6

FAMILY : SGS55E08BR
MODEL NO: SGS55E08BR/84
Check Position No/Part No or Replacement No

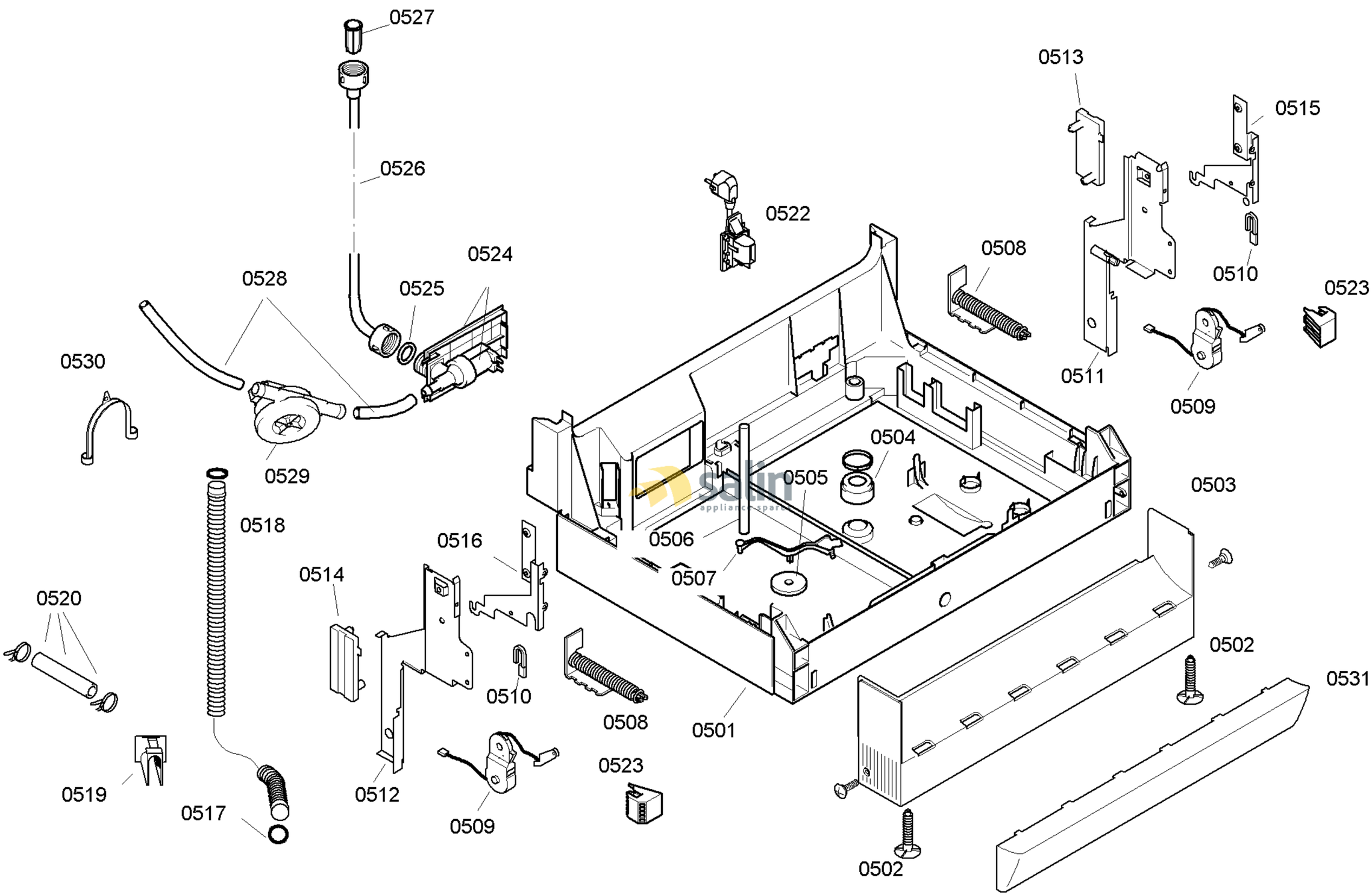

58300000130661 aet 000 a 5/6

FAMILY : SGS55E08BR
MODEL NO: SGS55E08BR/84
Check Position No/Part No or Replacement No

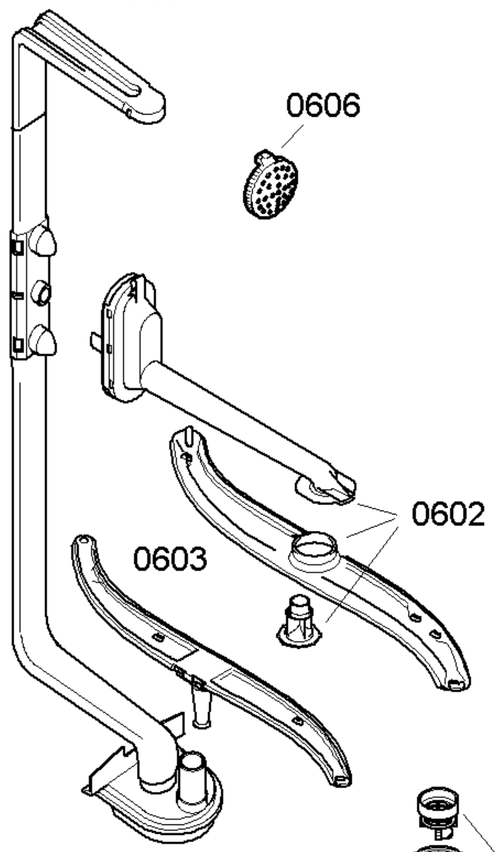

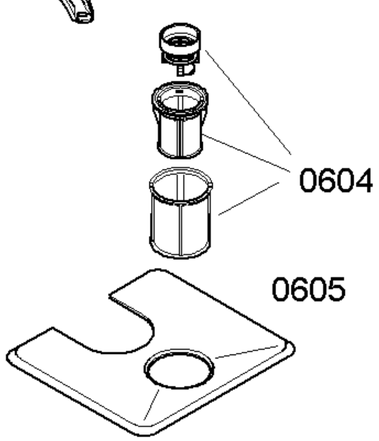

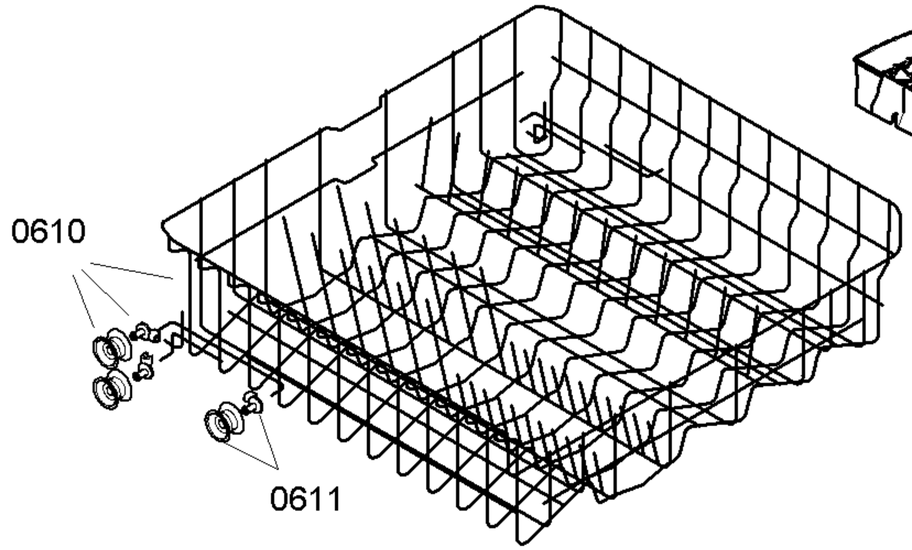

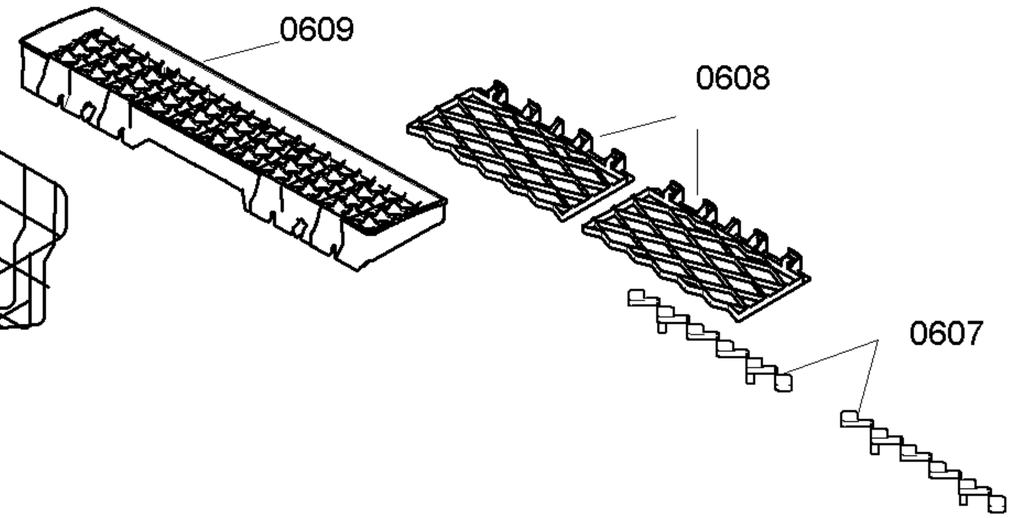

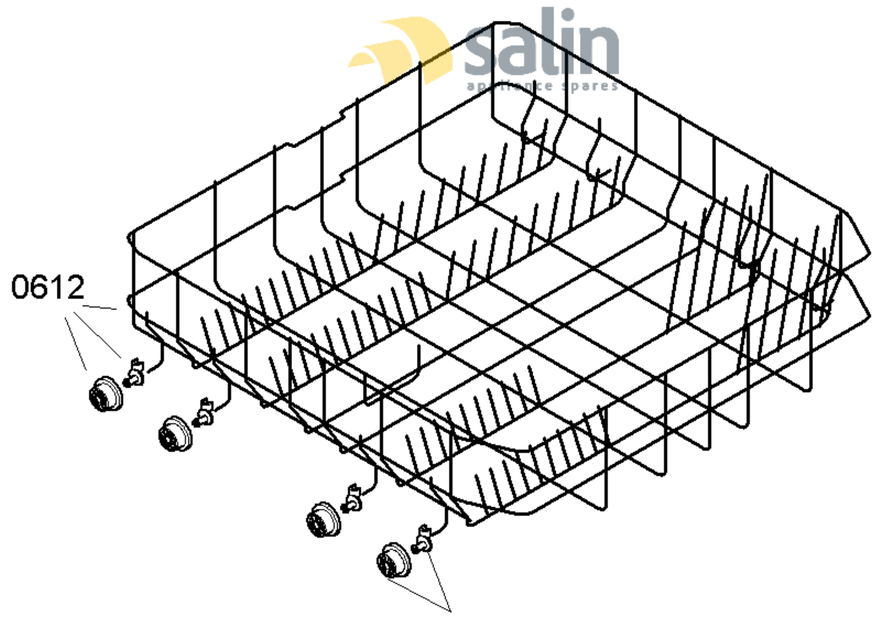

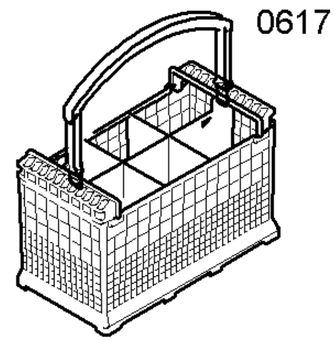

58300000130661 aet 000 a 6/6

FAMILY : SGS55E08BR
MODEL NO: SGS55E08BR/84
Check Position No/Part No or Replacement No