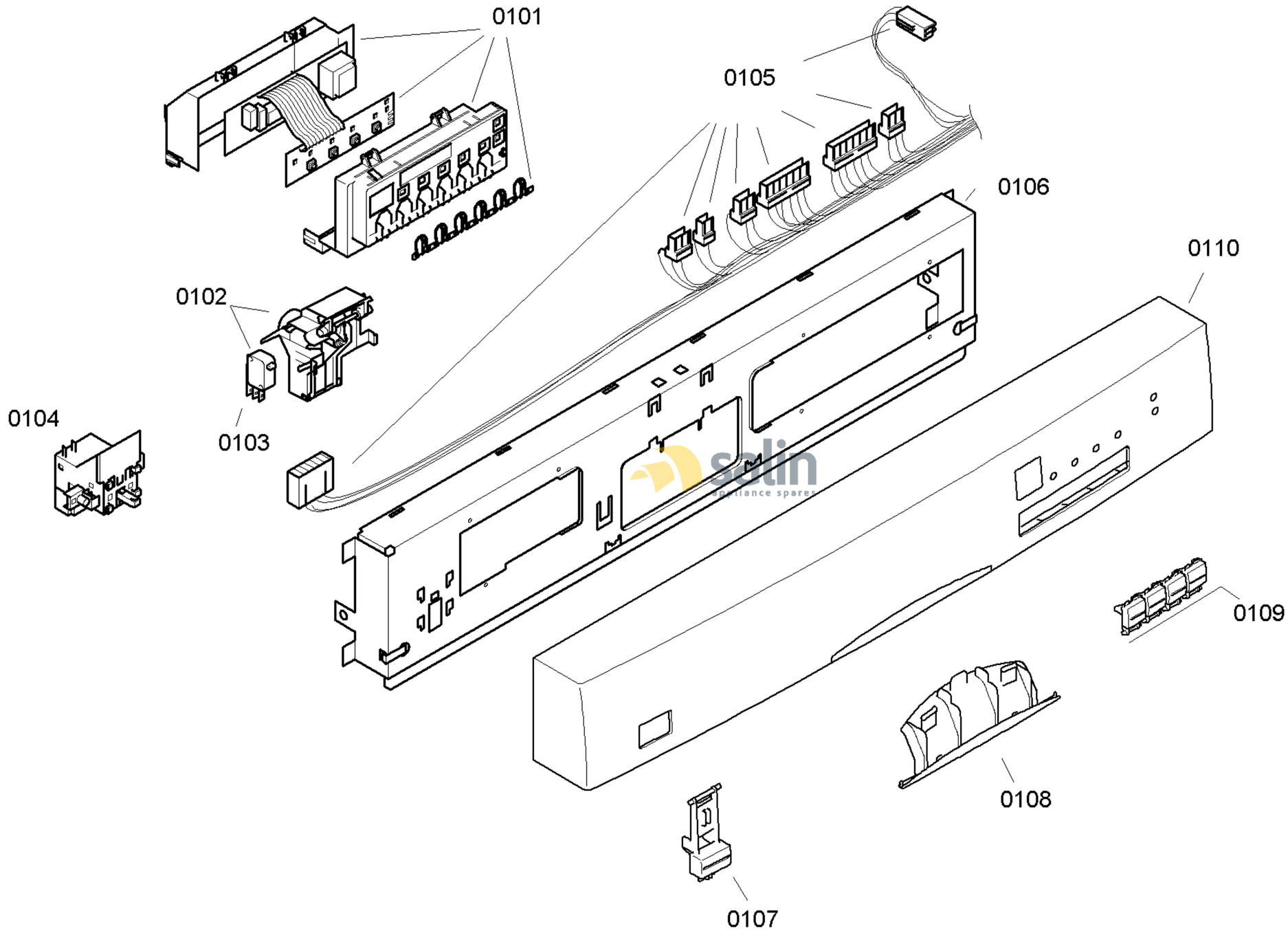

58300000119238 aet 000 b 1/6

FAMILY : SGS46M02EP
MODEL NO: SGS46M02EP/76
Check Position No/Part No or Replacement No

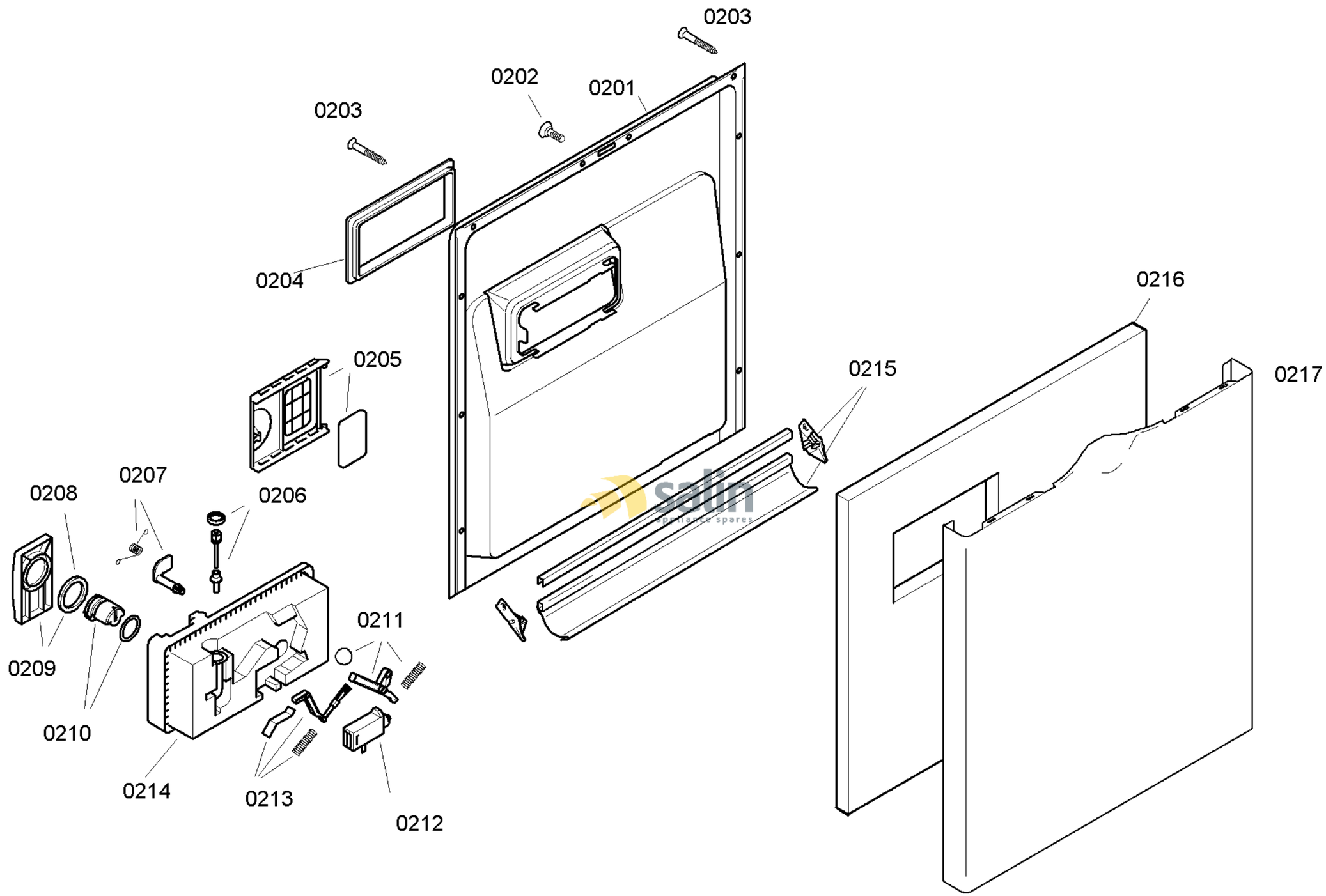

58300000119238 aet 000 b 2/6

FAMILY : SGS46M02EP
MODEL NO: SGS46M02EP/76
Check Position No/Part No or Replacement No

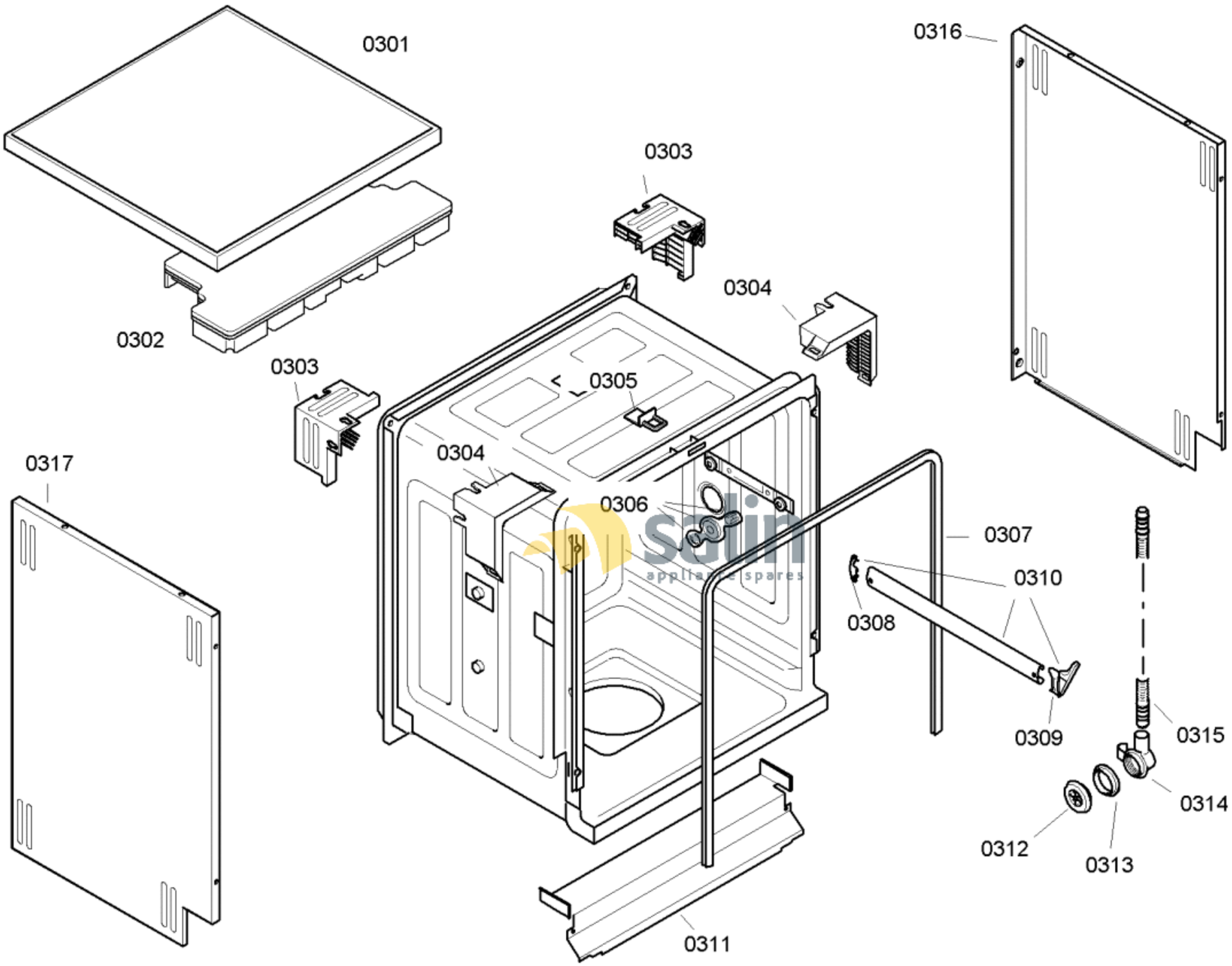

58300000119238 aet 000 b 3/6

FAMILY : SGS46M02EP

MODEL NO: SGS46M02EP/76

Check Position No/Part No or Replacement No

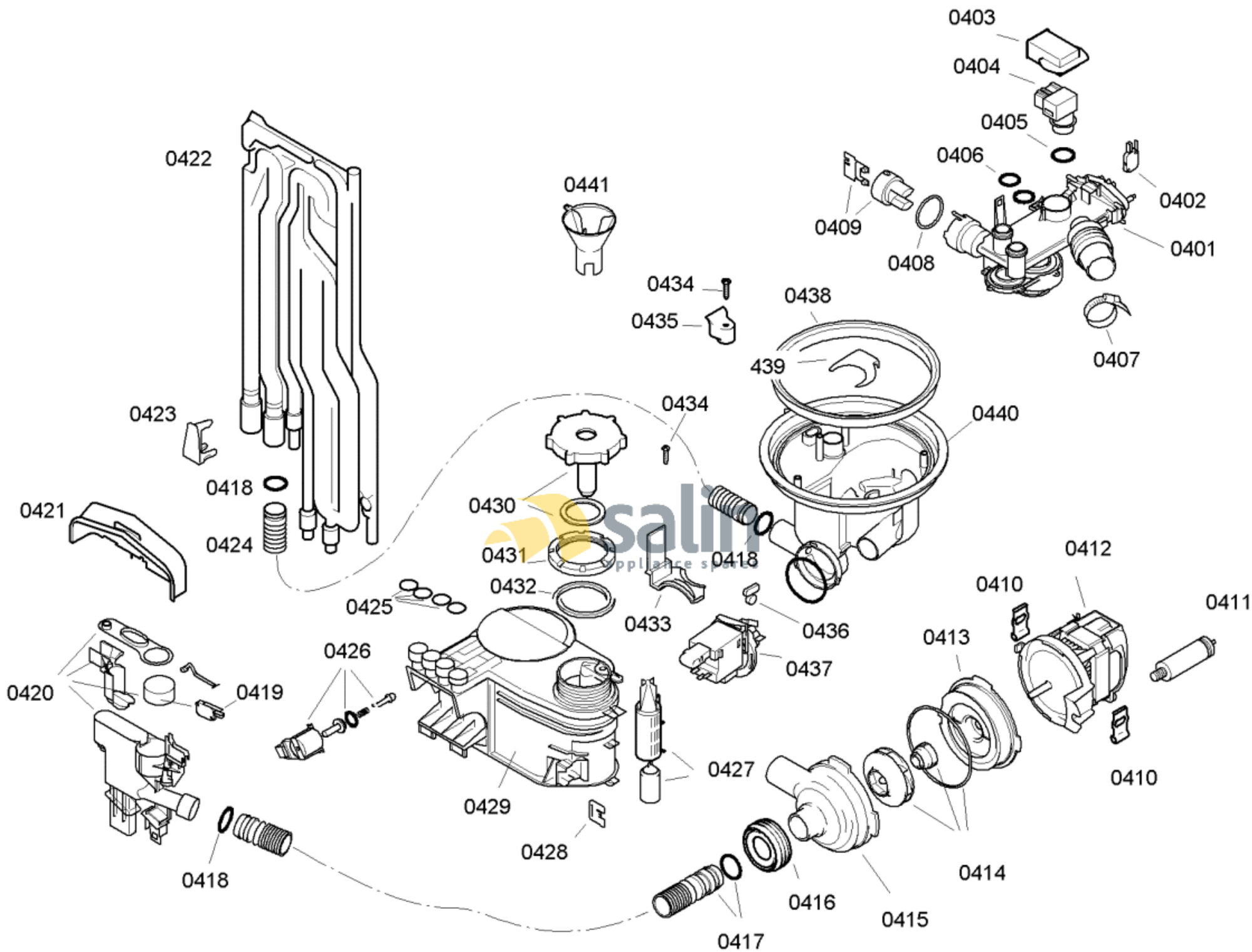

58300000119238 aet 000 b 4/6

FAMILY : SGS46M02EP

MODEL NO: SGS46M02EP/76

Check Position No/Part No or Replacement No

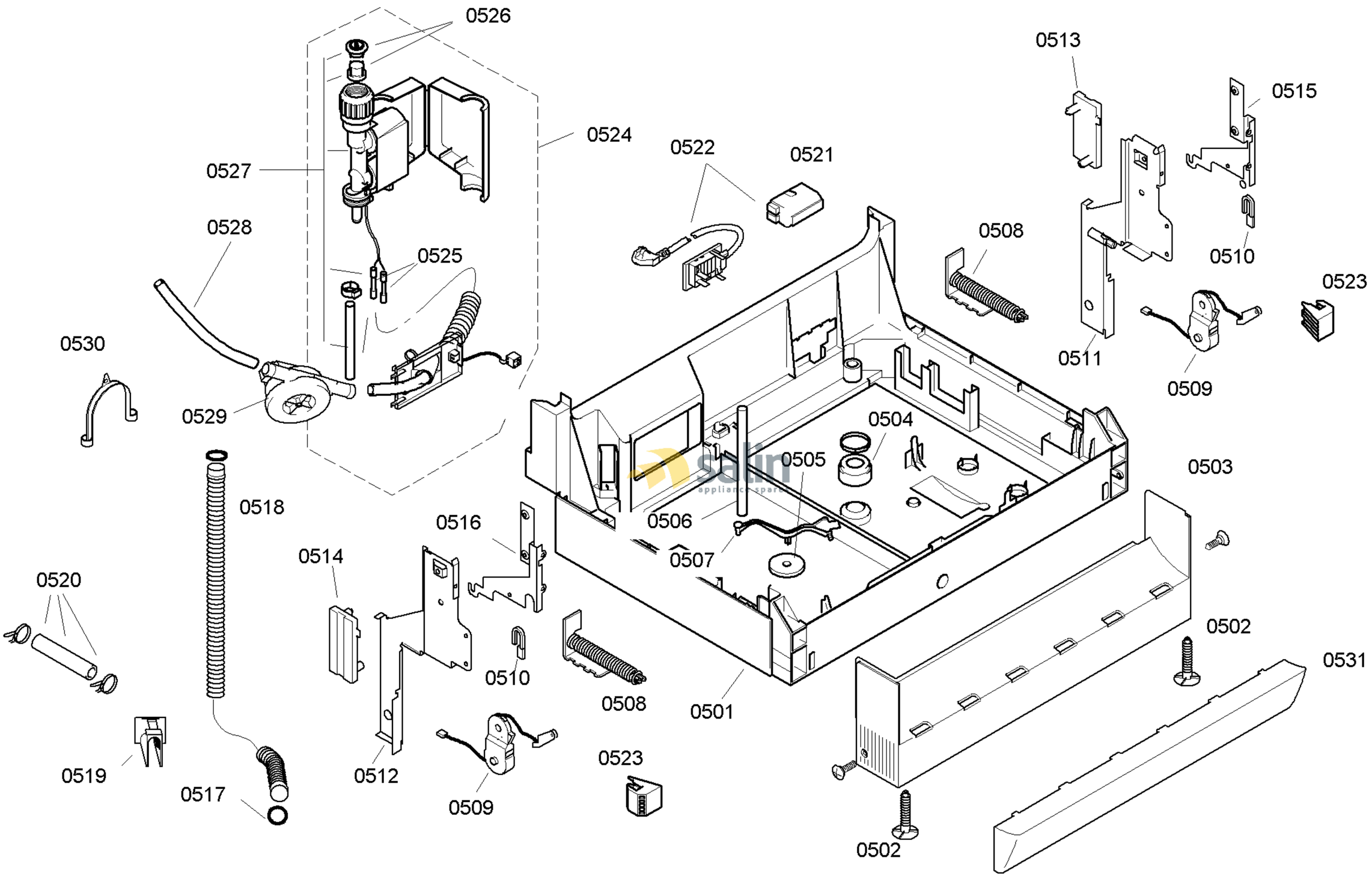

58300000119238 aet 000 b 5/6

FAMILY : SGS46M02EP
MODEL NO: SGS46M02EP/76
Check Position No/Part No or Replacement No

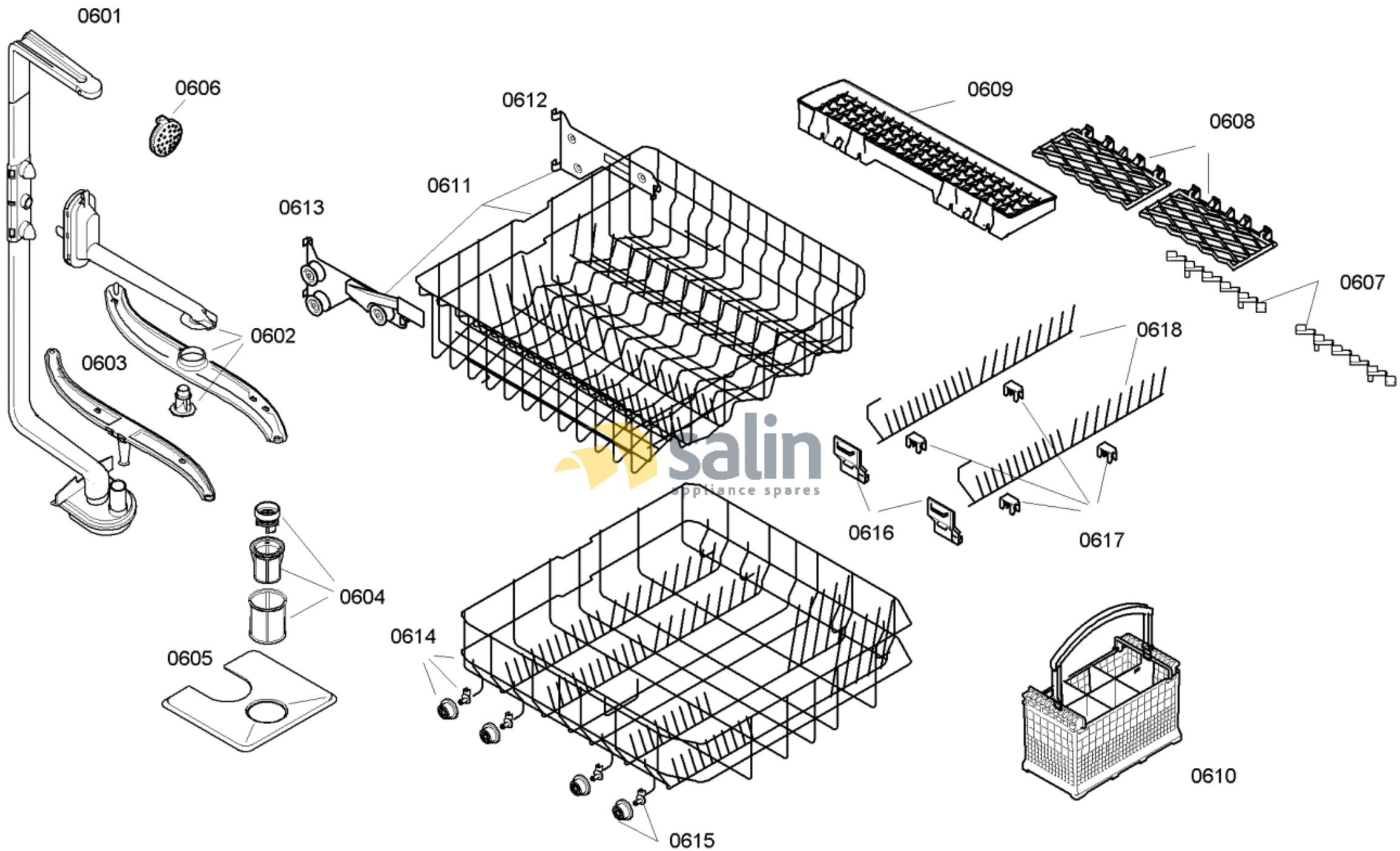

58300000119238 aet 000 b 6/6

FAMILY : SGS46M02EP

MODEL NO: SGS46M02EP/76

Check Position No/Part No or Replacement No