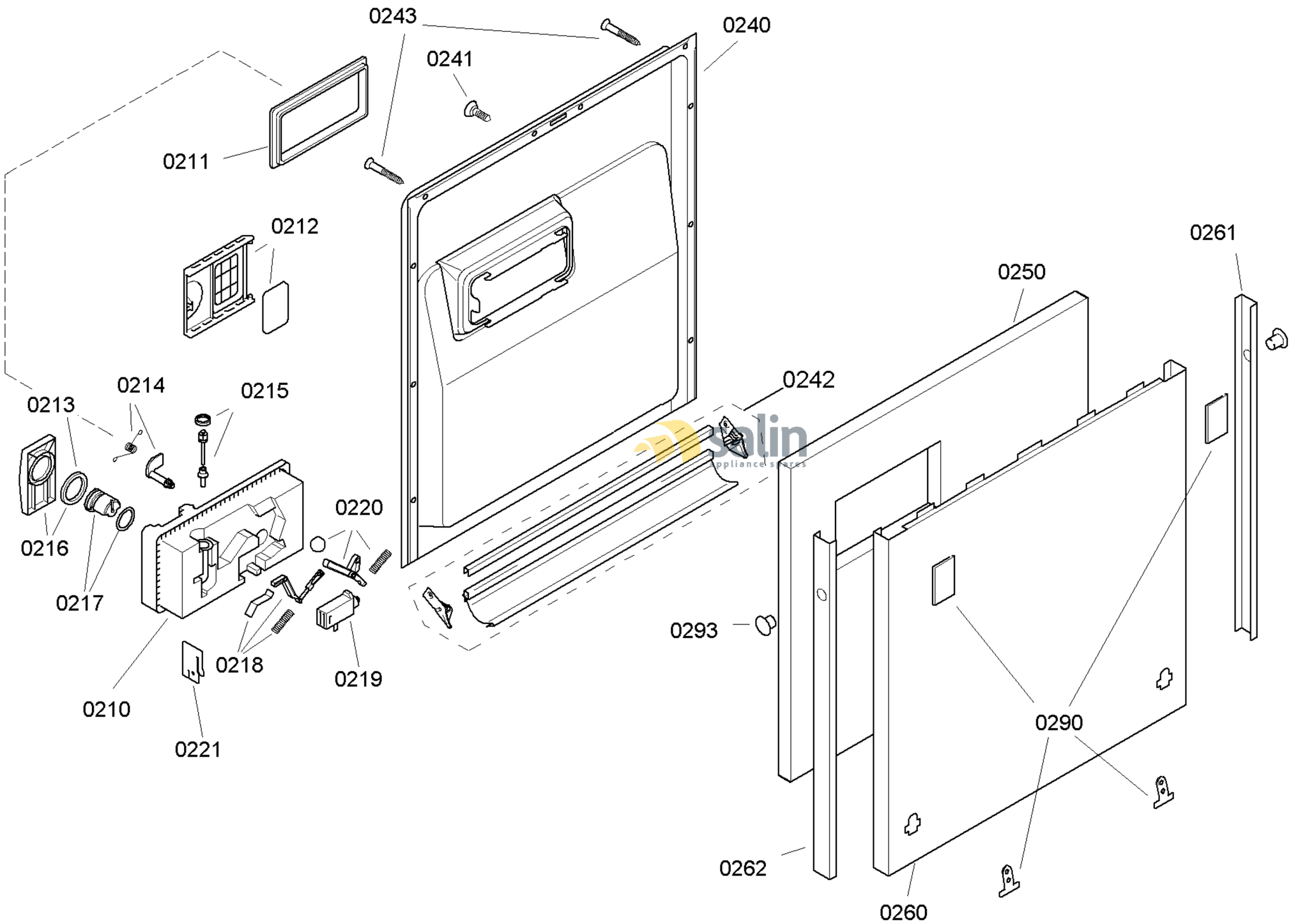

58300000135259 aet 000 a 2/6

FAMILY : SHV43E83EU
MODEL NO: SHV43E83EU/93
Check Position No/Part No or Replacement No

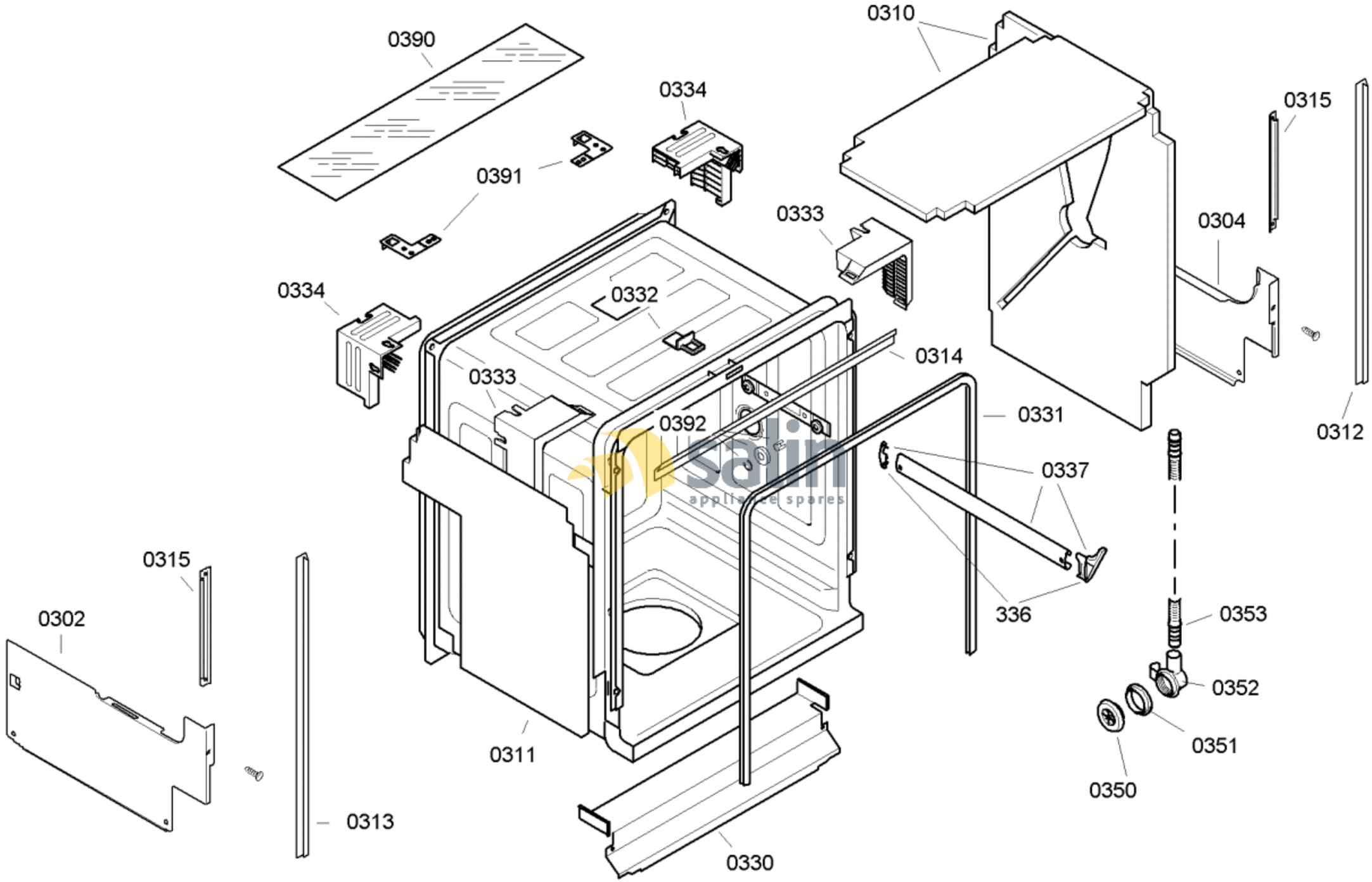

58300000135259 aet 000 a 3/6

FAMILY : SHV43E83EU

MODEL NO: SHV43E83EU/93

Check Position No/Part No or Replacement No

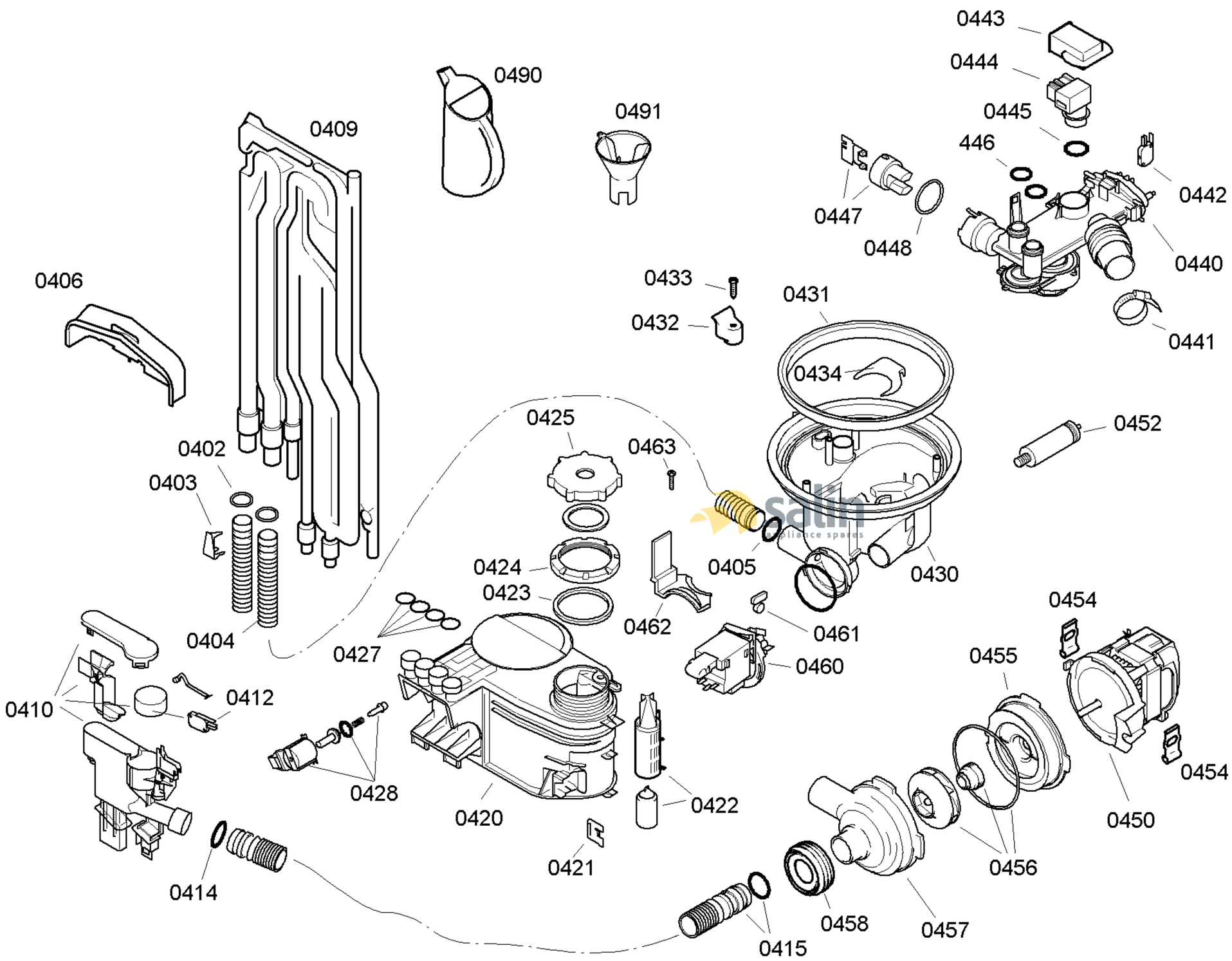

58300000135259 aet 000 a 4/6

FAMILY : SHV43E83EU
MODEL NO: SHV43E83EU/93
Check Position No/Part No or Replacement No

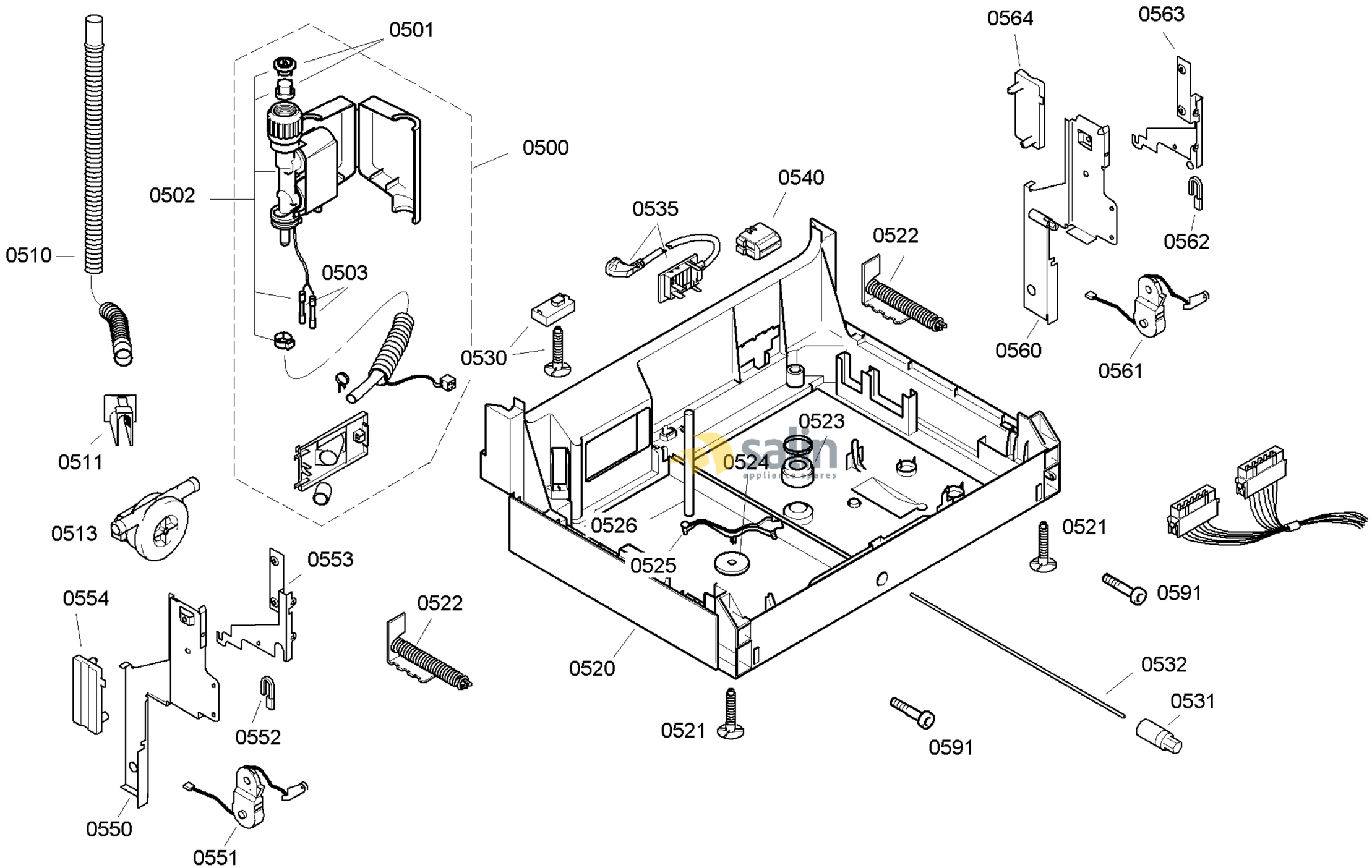

58300000135259 aet 000 a 5/6

FAMILY : SHV43E83EU
MODEL NO: SHV43E83EU/93
Check Position No/Part No or Replacement No

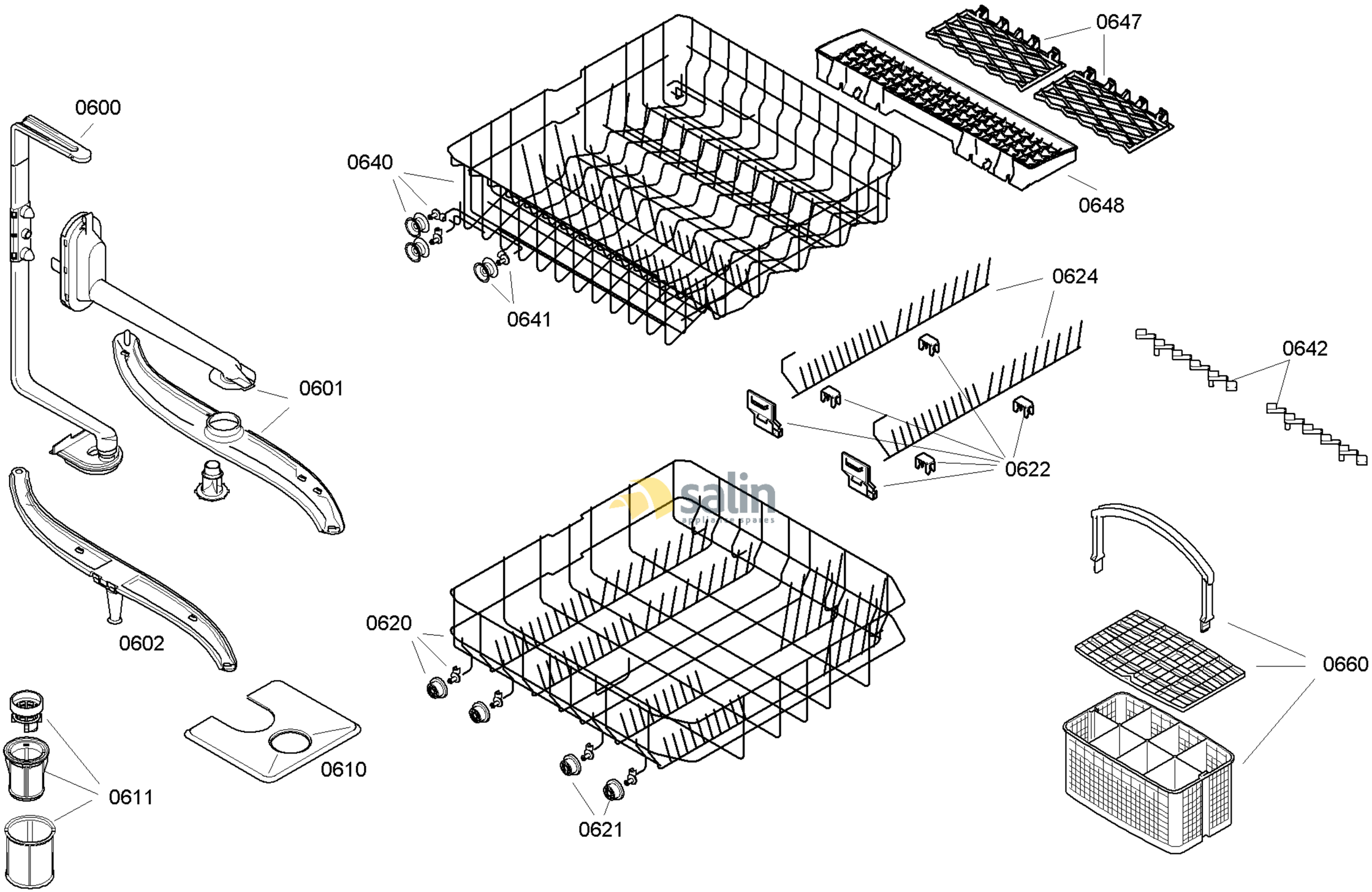

58300000135259 aet 000 a 6/6

FAMILY : SHV43E83EU
MODEL NO: SHV43E83EU/93
Check Position No/Part No or Replacement No