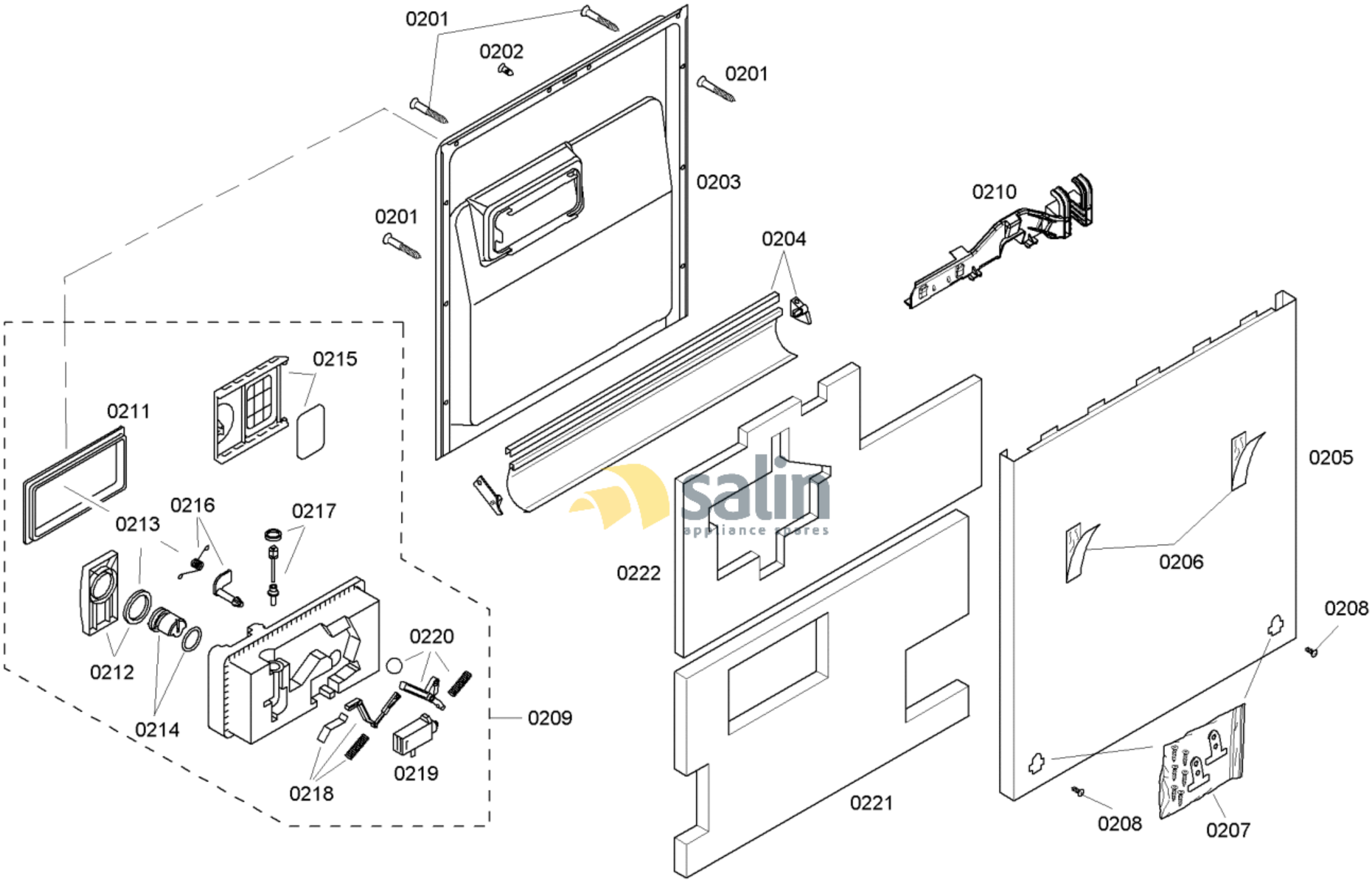

583000001 33679 aet 000 b 2/6

FAMILY : SHV57C03UC

MODEL NO: SHV57C03UC/46

Check Position No/Part No or Replacement No

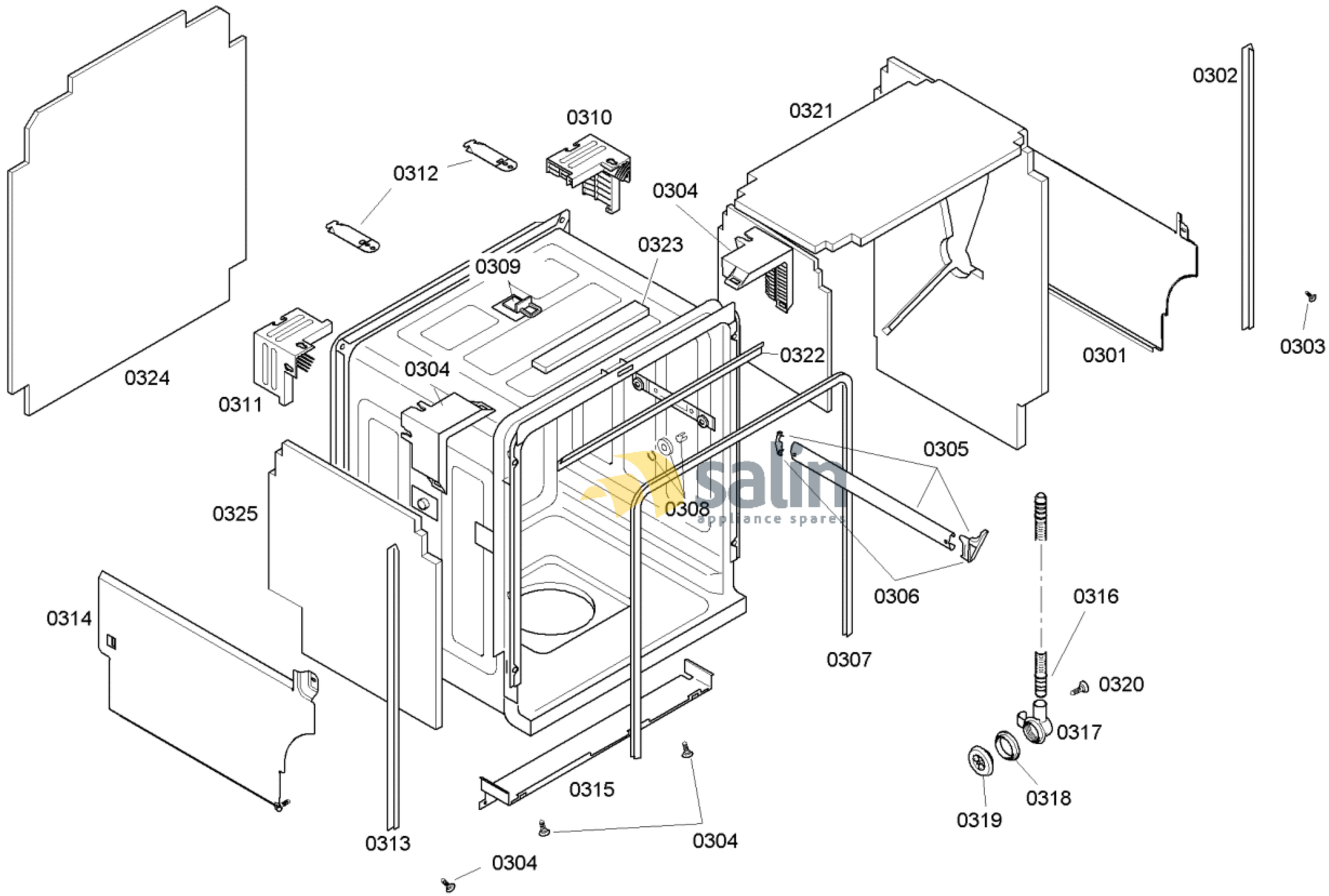

58300000132029 aet 000 b 3/6

FAMILY : SHV57C03UC

MODEL NO: SHV57C03UC/46

Check Position No/Part No or Replacement No

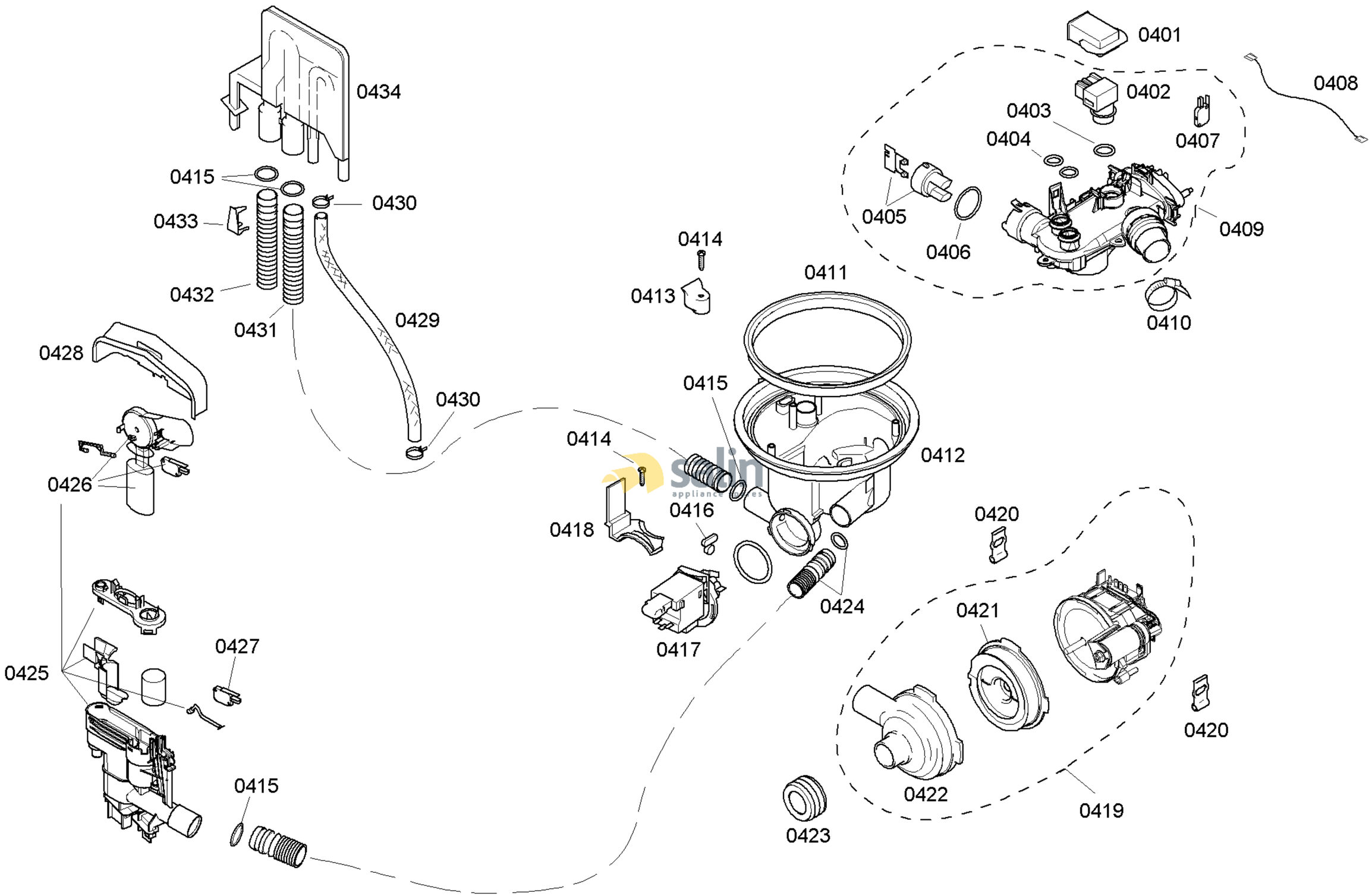

58300000132029 aet 000 b 4/6

FAMILY : SHV57C03UC
MODEL NO: SHV57C03UC/46
Check Position No/Part No or Replacement No

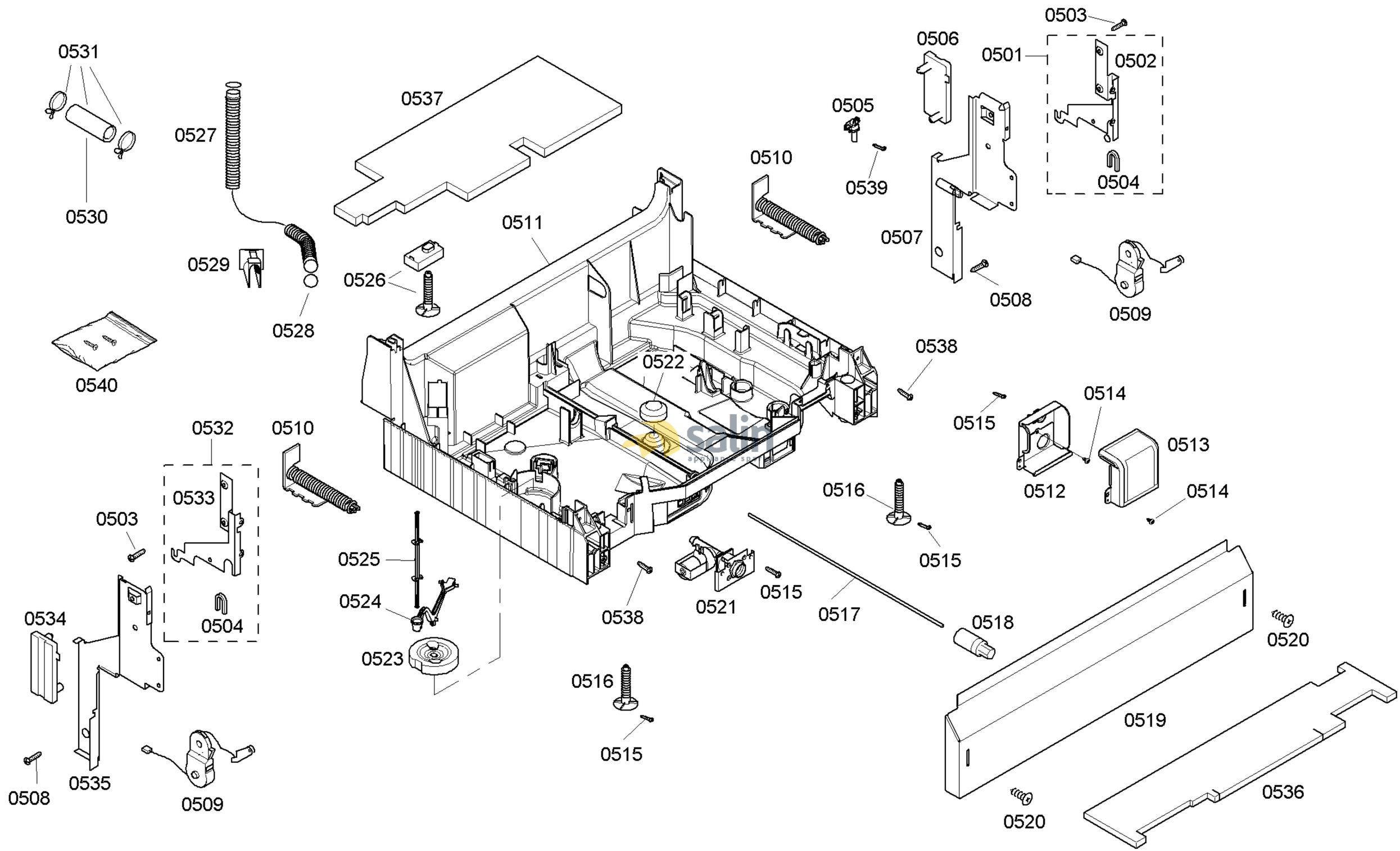

58300000132029 aet 000 b 5/6

FAMILY : SHV57C03UC
MODEL NO: SHV57C03UC/46
Check Position No/Part No or Replacement No

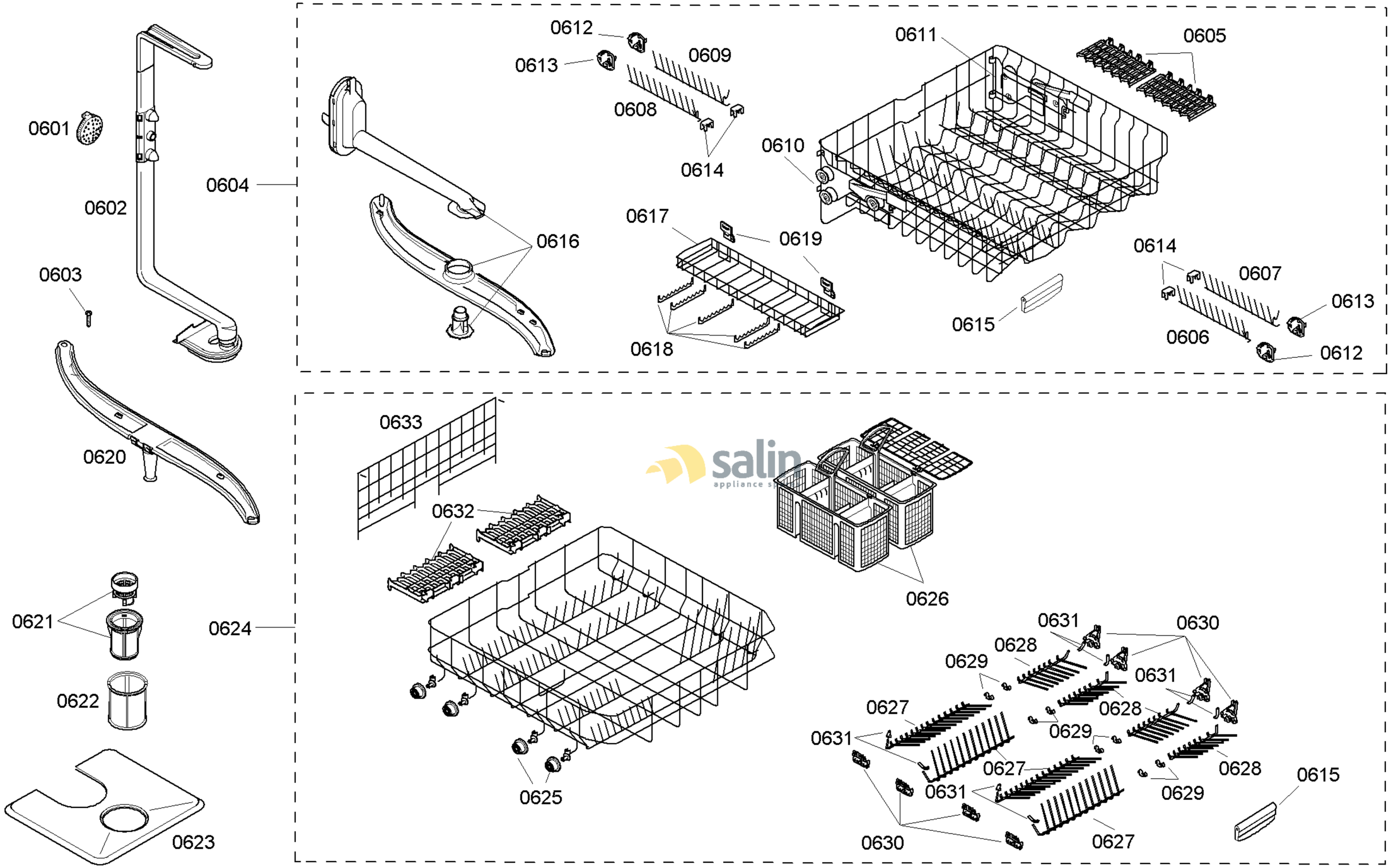

58300000132029 aet 000 b 6/6

FAMILY : SHV57C03UC
MODEL NO: SHV57C03UC/46
Check Position No/Part No or Replacement No