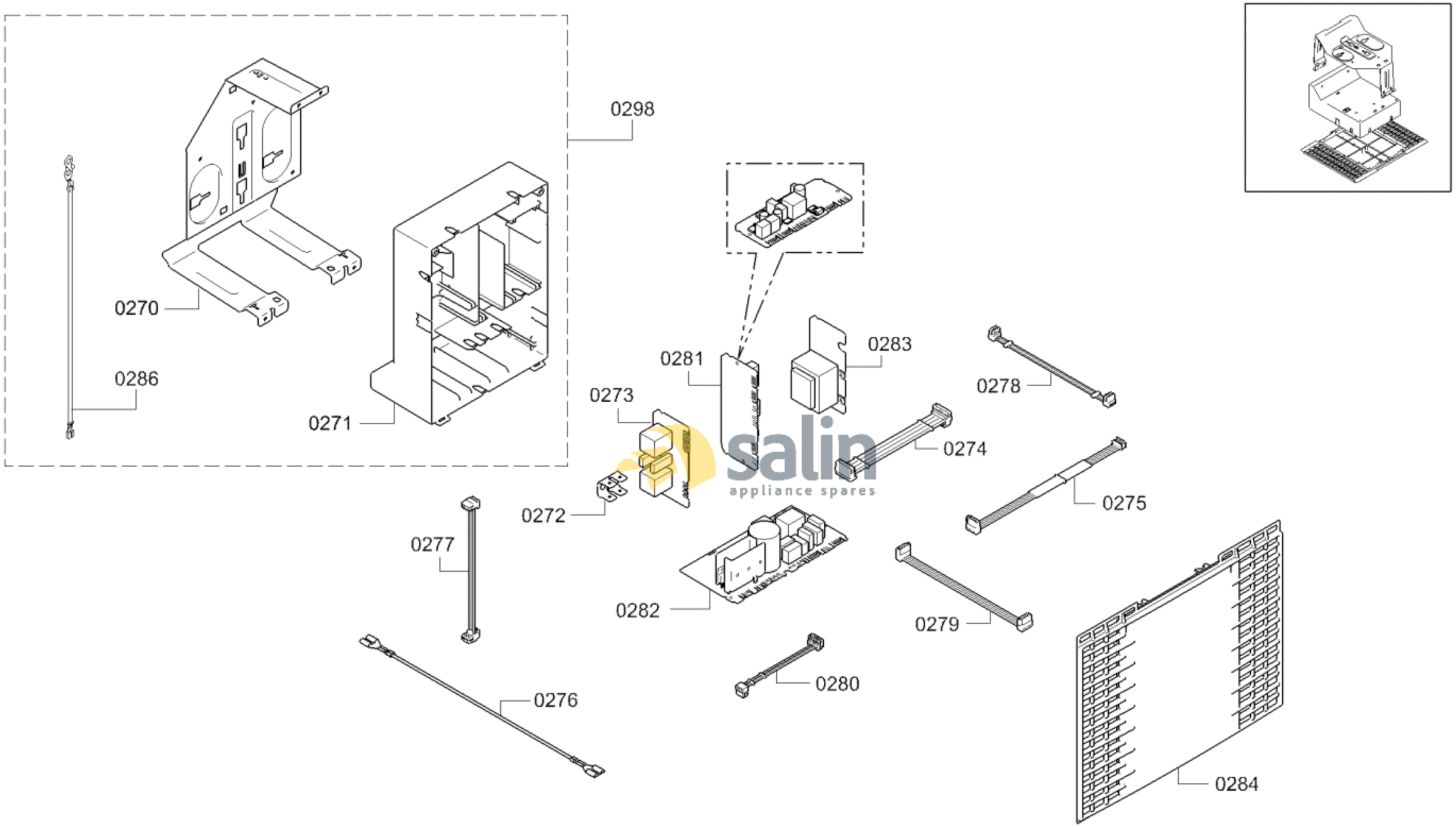

58300000179878 aet 000 b 2/3

FAMILY : DIB121K50

MODEL NO: DIB121K50/03

Check Position No/Part No or Replacement No

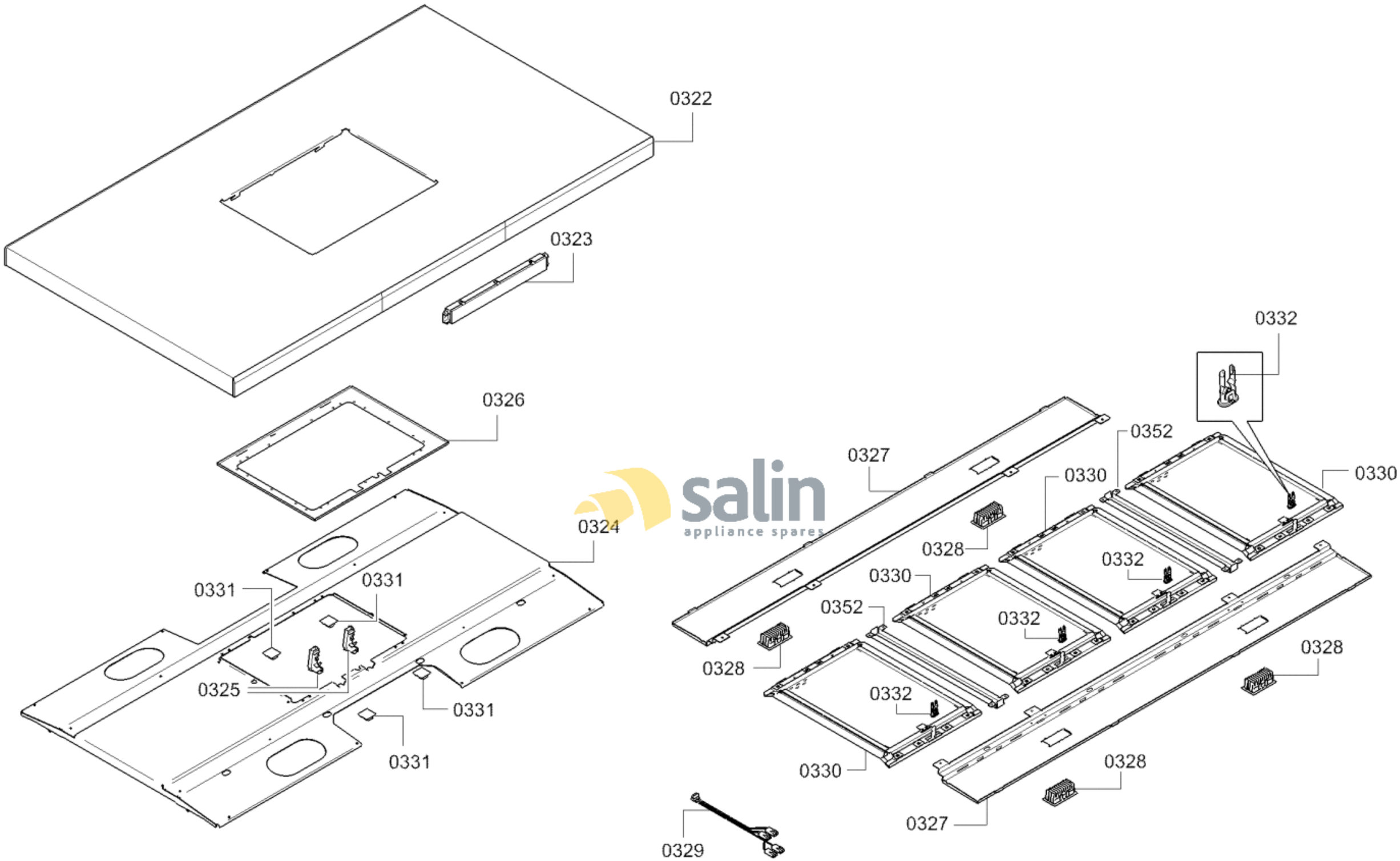

58300000179878 aet 000 b 3/3

FAMILY : DIB121K50

MODEL NO: DIB121K50/03

Check Position No/Part No or Replacement No