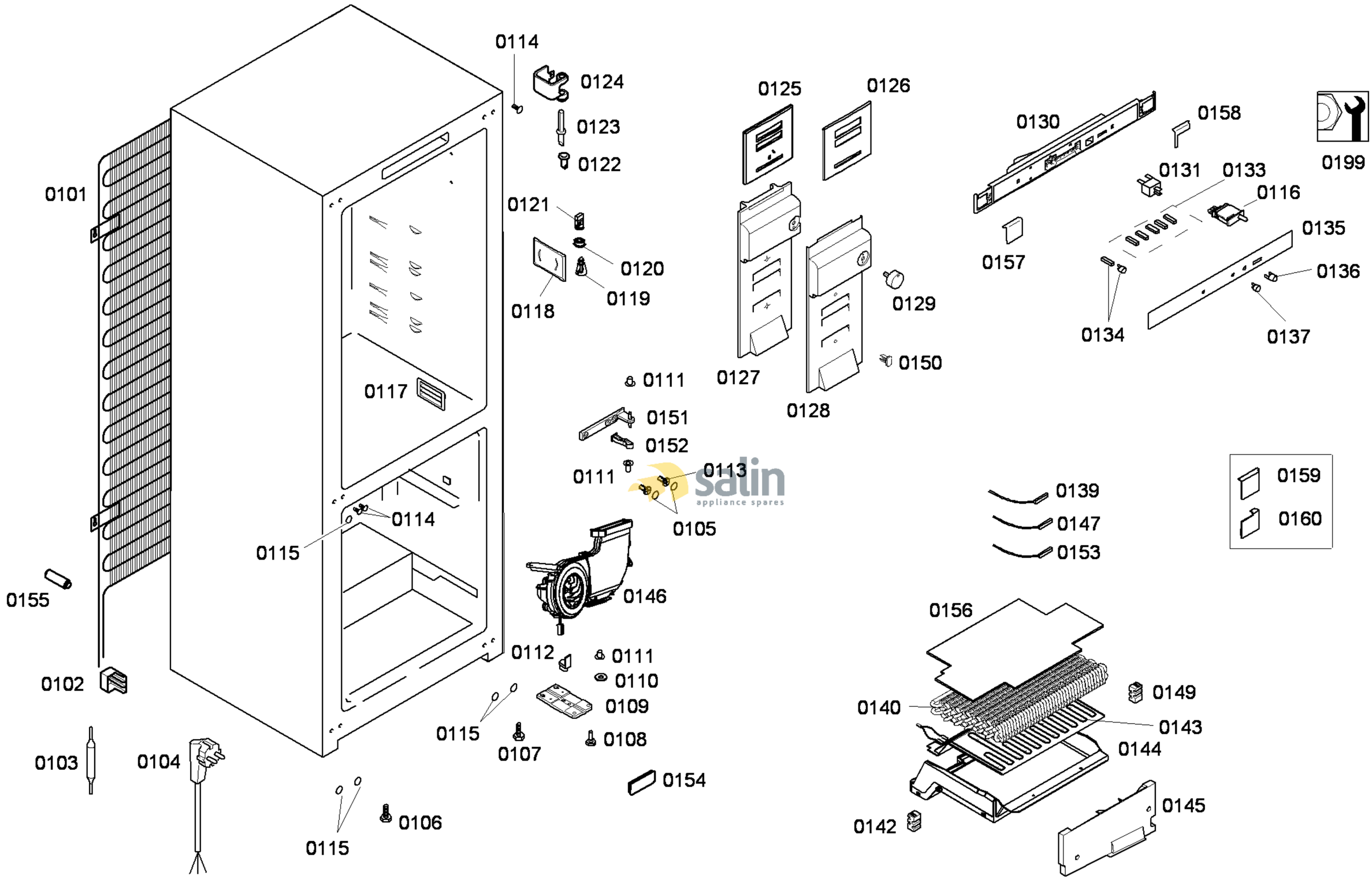


58300000140398 aet 000 a 1/3

FAMILY : KGN33X50
MODEL NO: KGN33X50/09
Check Position No/Part No or Replacement No

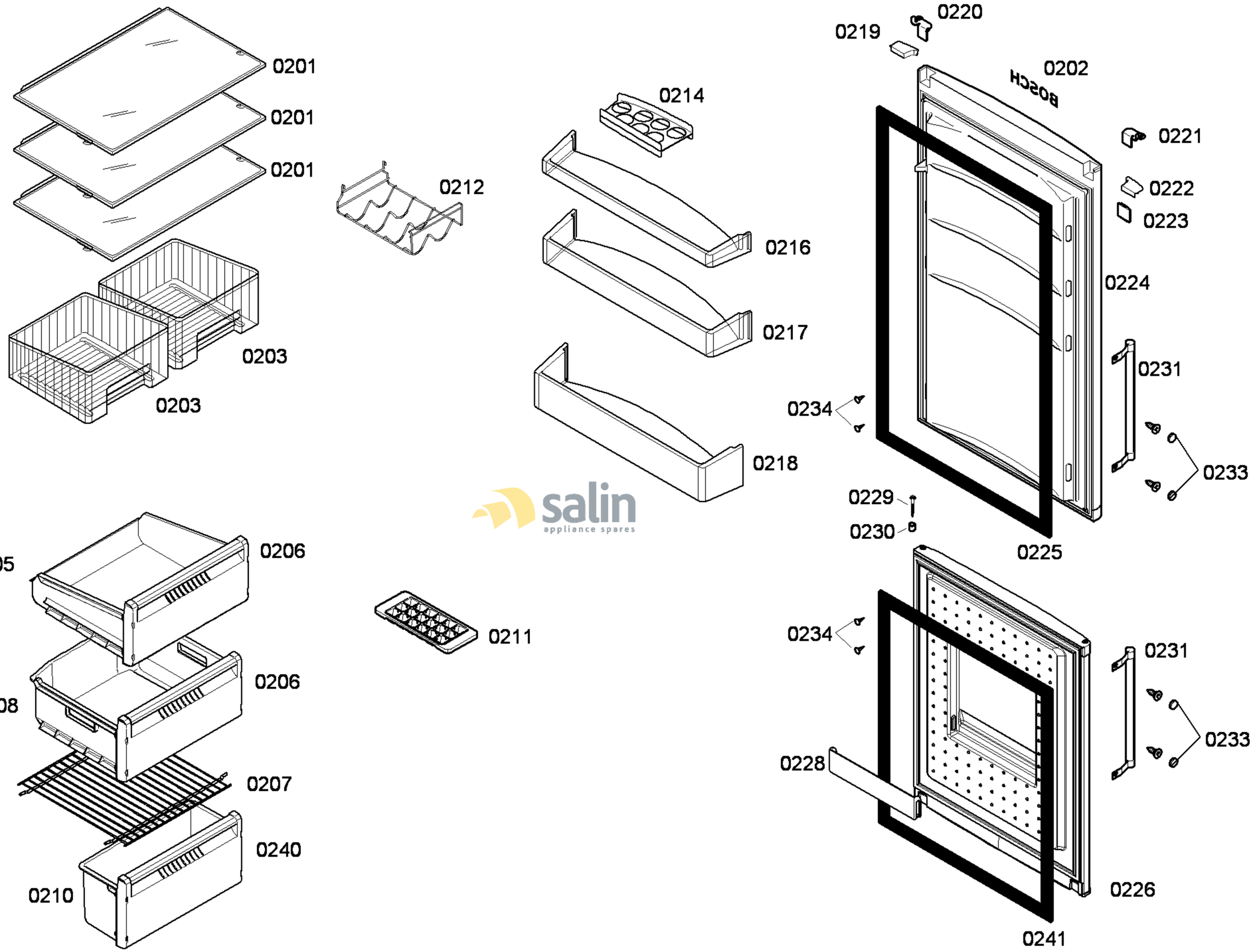


salin
appliance spares

583000001 40398 aet 000 a 2/3

FAMILY : KGN33X50
MODEL NO: KGN33X50/09
Check Position No/Part No or Replacement No