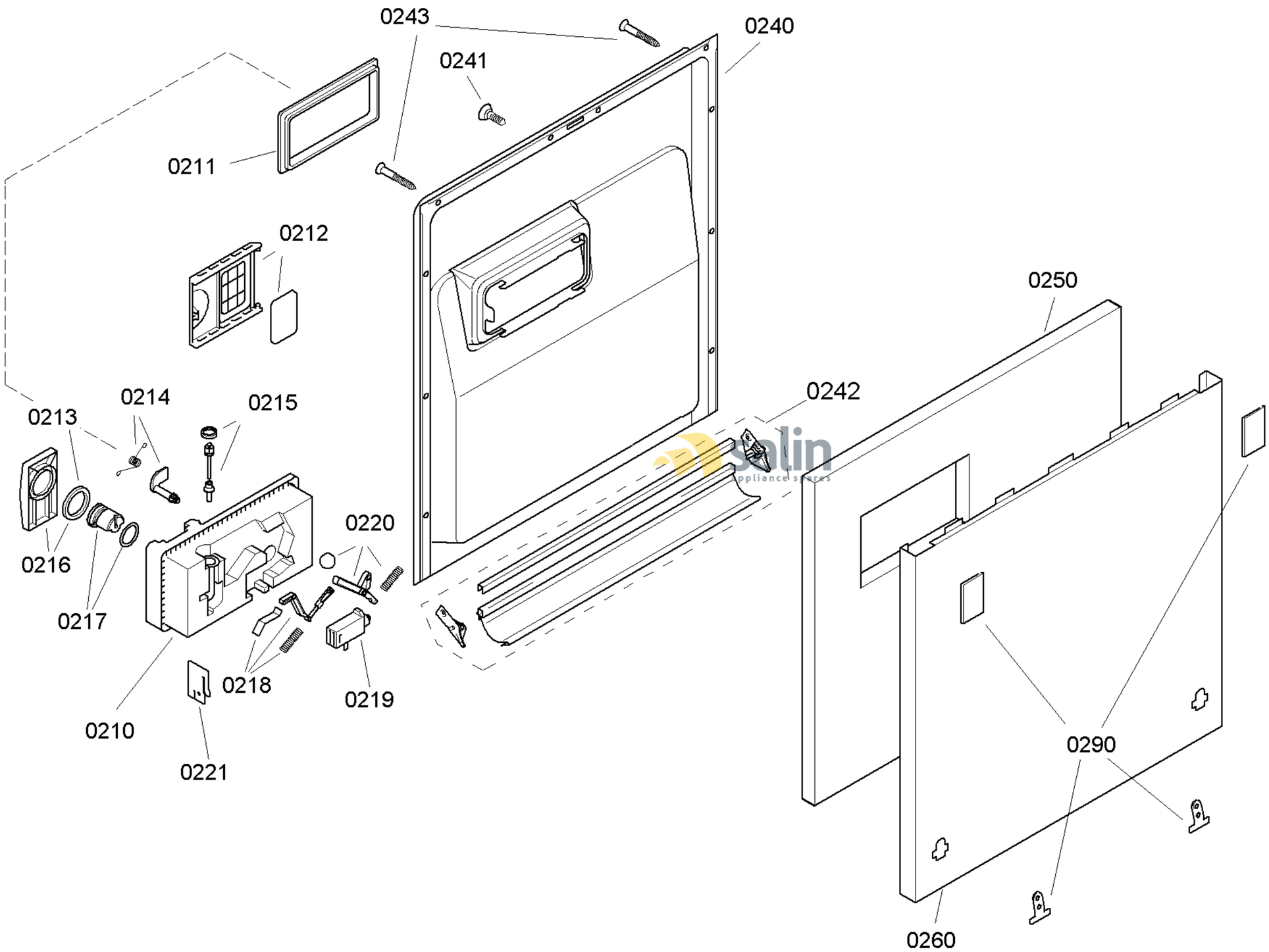

58300000131849 aet 000 a 2/6

FAMILY : SHV33M03EU
MODEL NO: SHV33M03EU/82
Check Position No/Part No or Replacement No

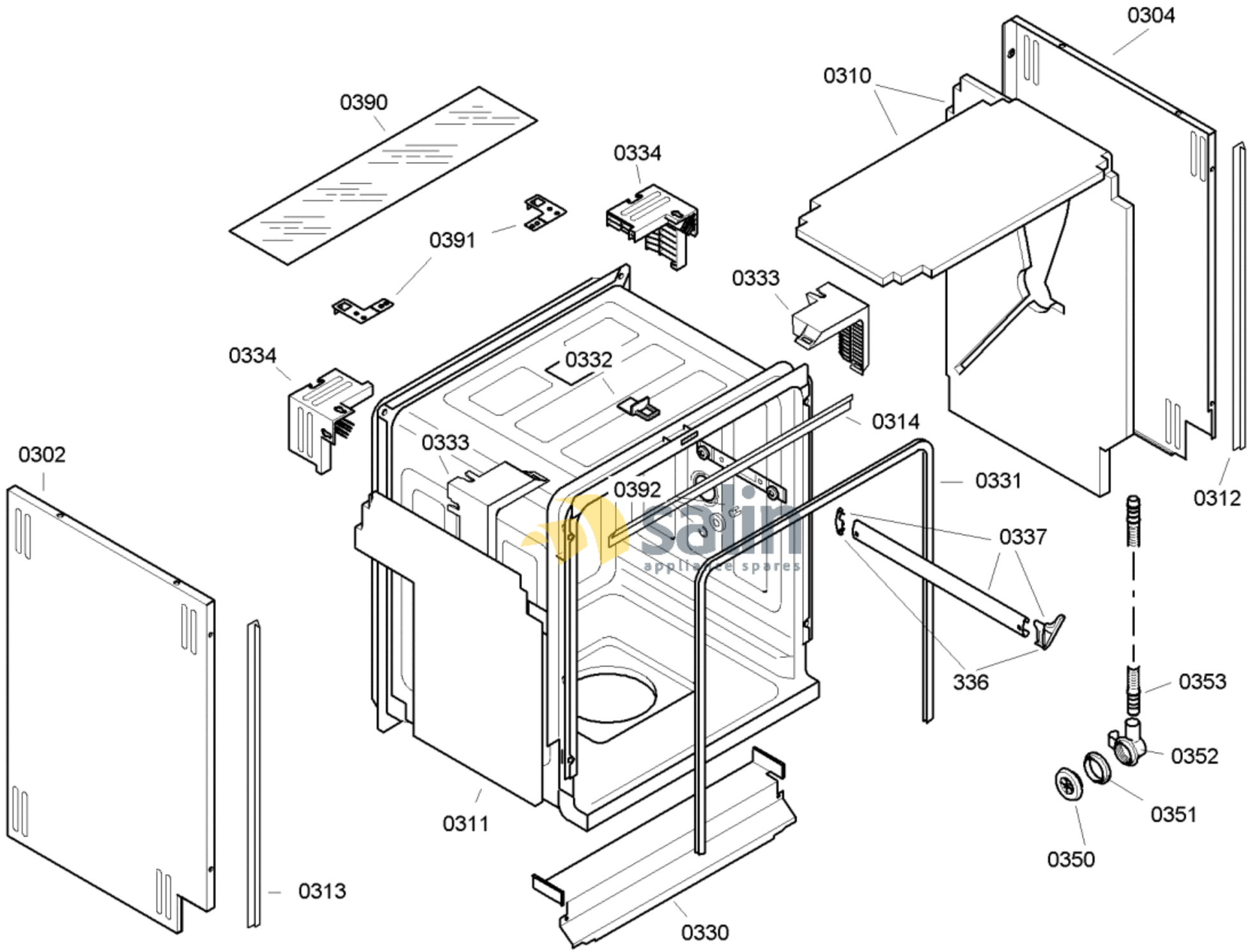

58300000131849 aet 000 a 3/6

FAMILY : SHV33M03EU

MODEL NO: SHV33M03EU/82

Check Position No/Part No or Replacement No

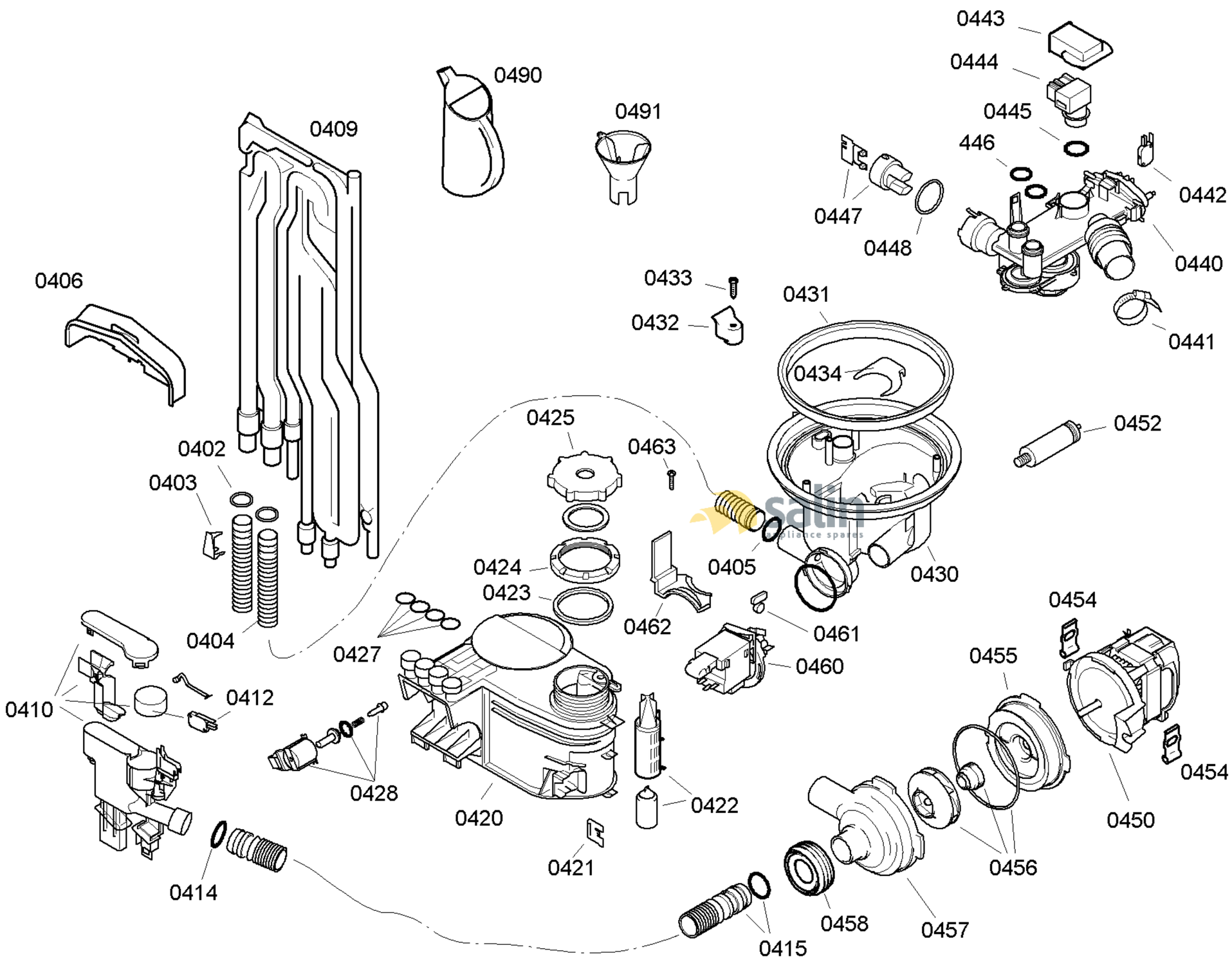

58300000131849 aet 000 a 4/6

FAMILY : SHV33M03EU
MODEL NO: SHV33M03EU/82
Check Position No/Part No or Replacement No

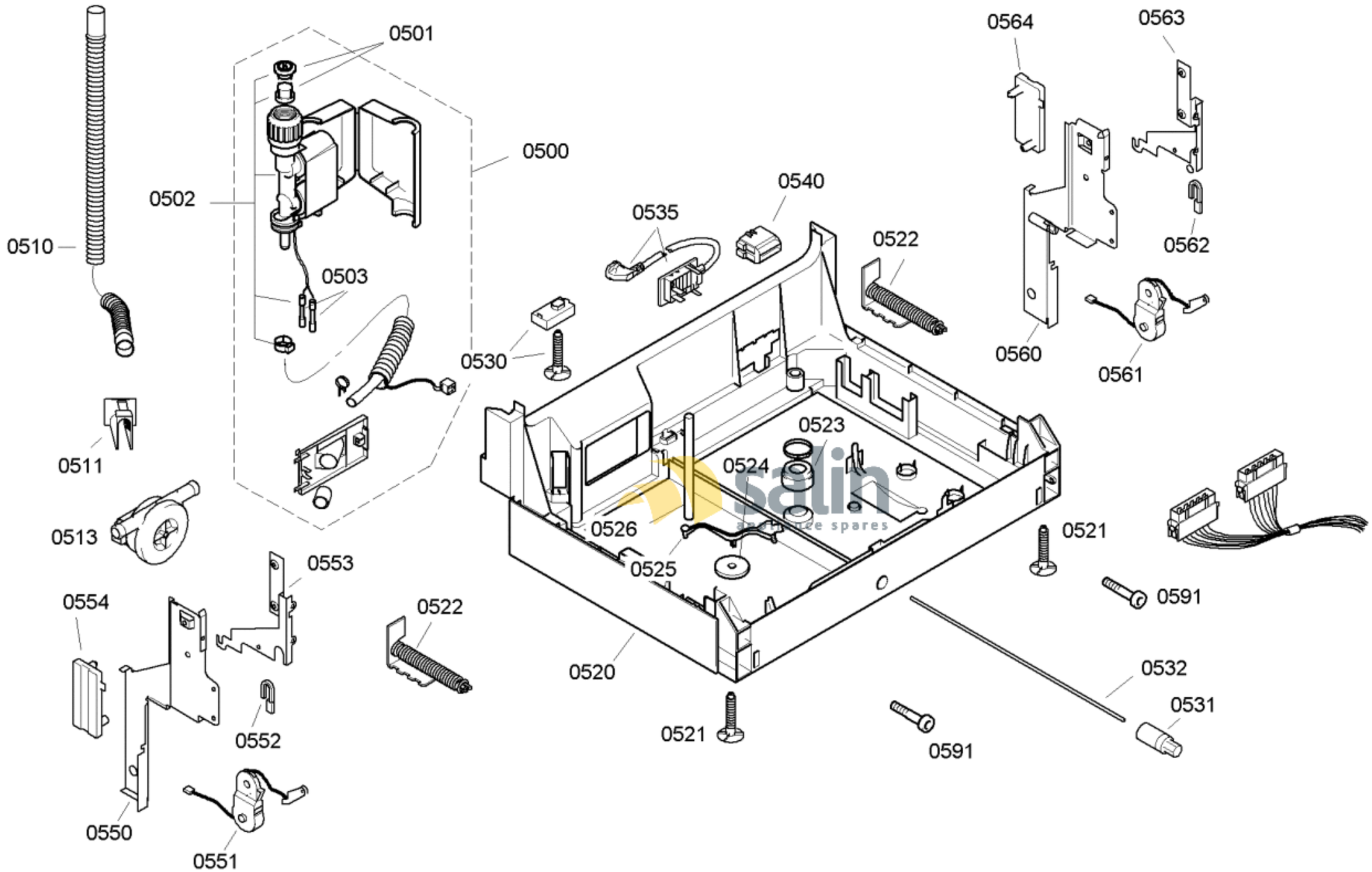

58300000131849 aet 000 a 5/6

FAMILY : SHV33M03EU

MODEL NO: SHV33M03EU/82

Check Position No/Part No or Replacement No

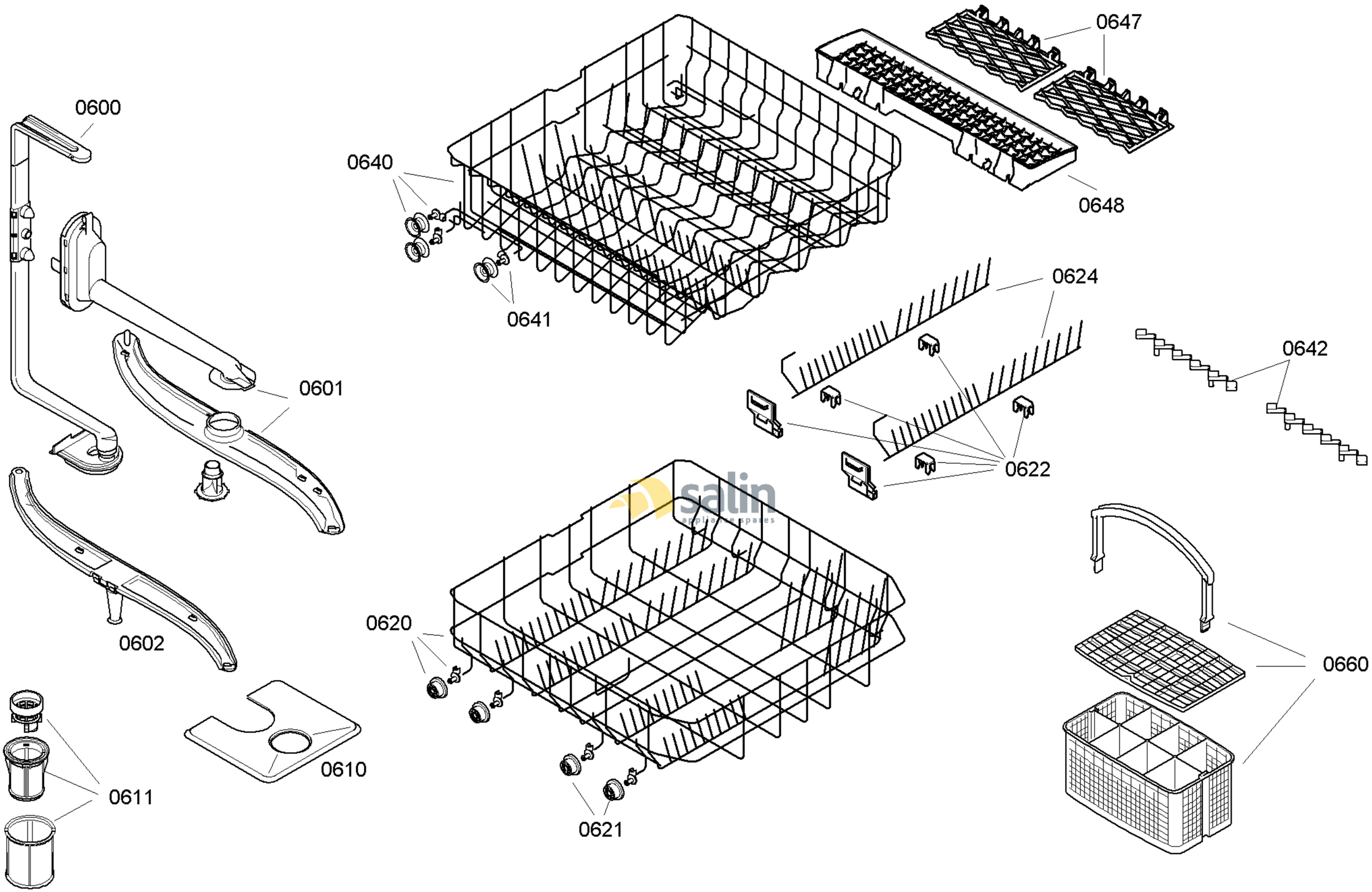

58300000131849 aet 000 a 6/6

FAMILY : SHV33M03EU
MODEL NO: SHV33M03EU/82
Check Position No/Part No or Replacement No