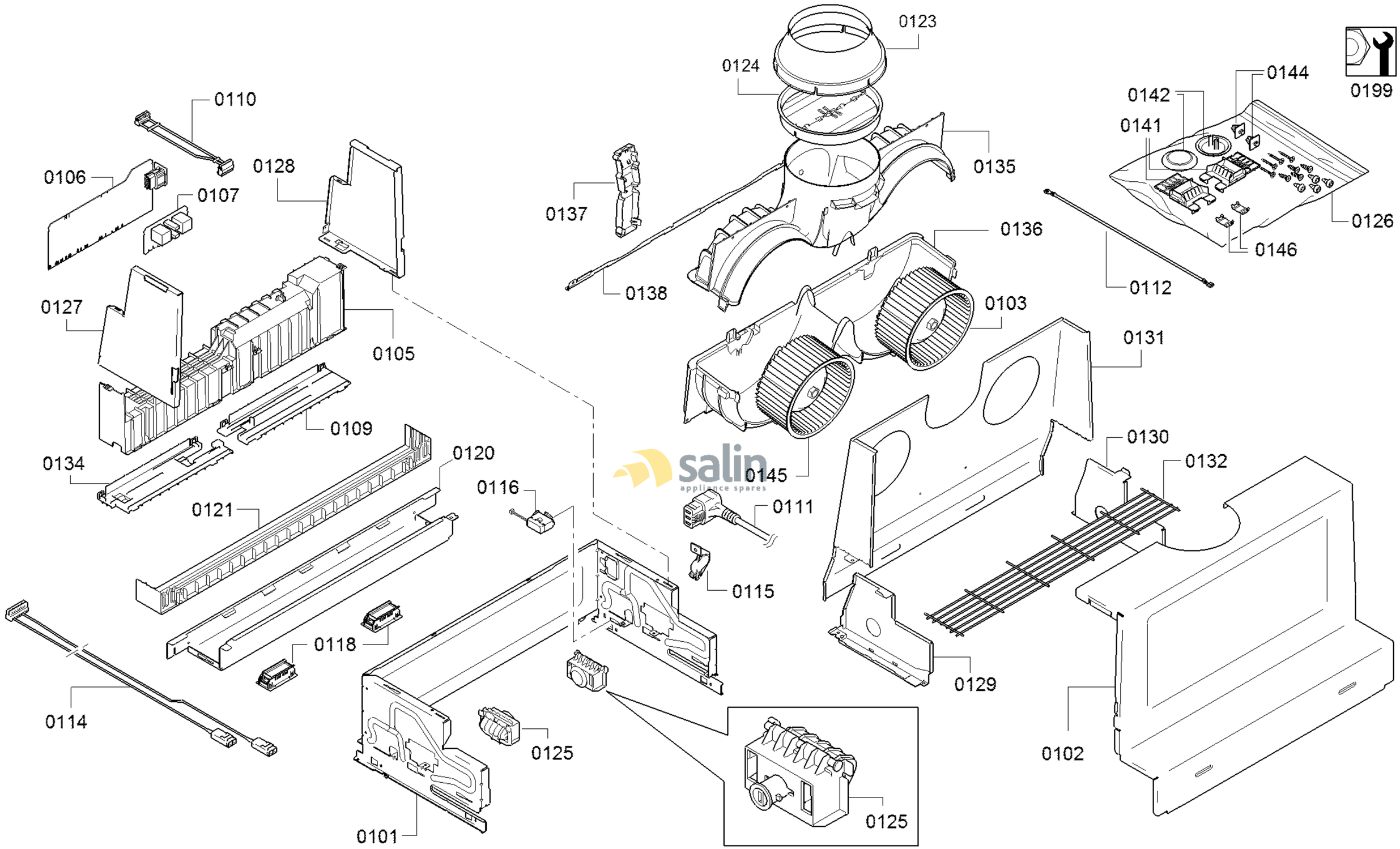

58300000233053 aet 000 a 1/2

FAMILY : DFS067A51A
MODEL NO: DFS067A51A/02
Check Position No/Part No or Replacement No

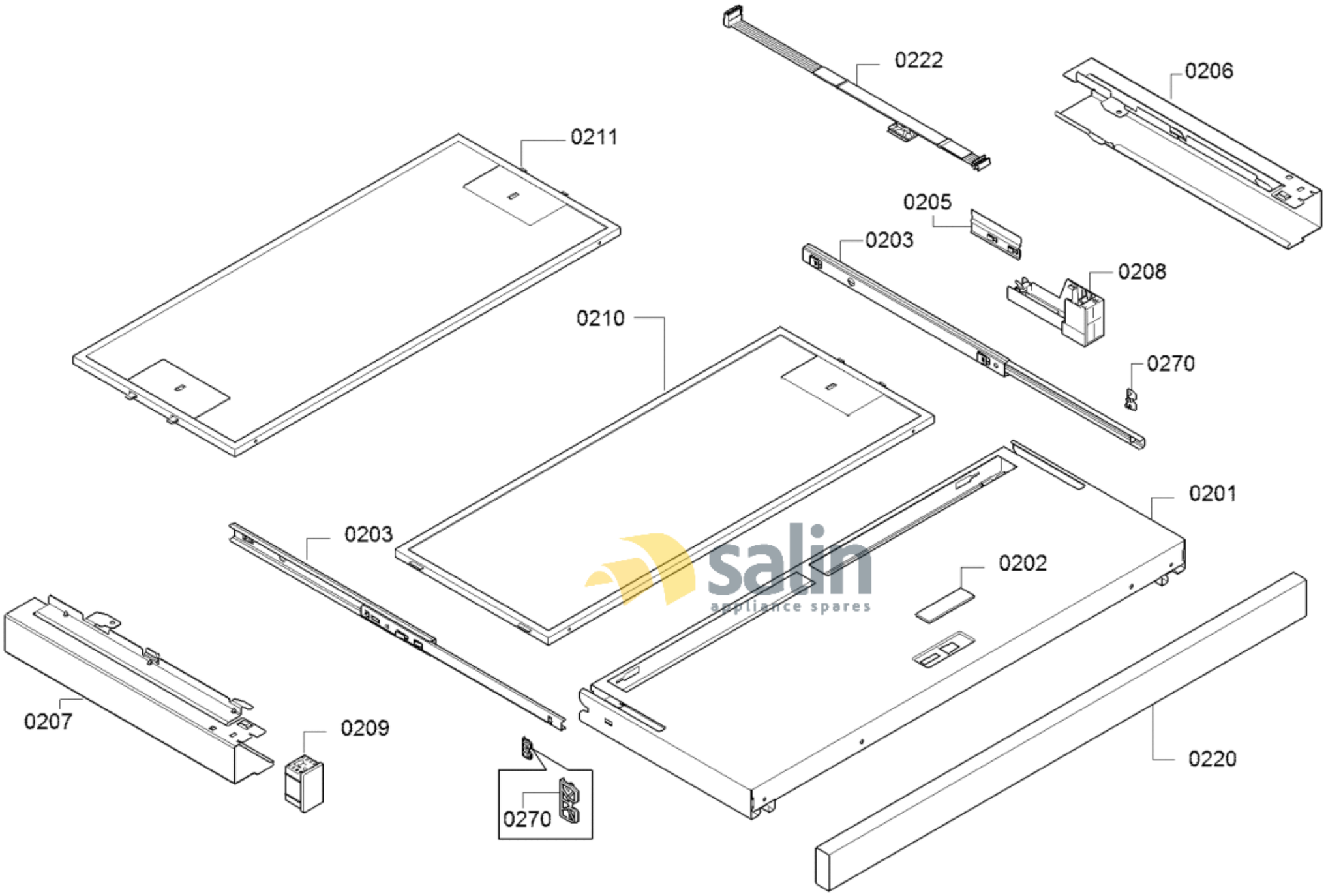

58300000233053 aet 000 a 2/2

FAMILY : DFS067A51A

MODEL NO: DFS067A51A/02

Check Position No/Part No or Replacement No