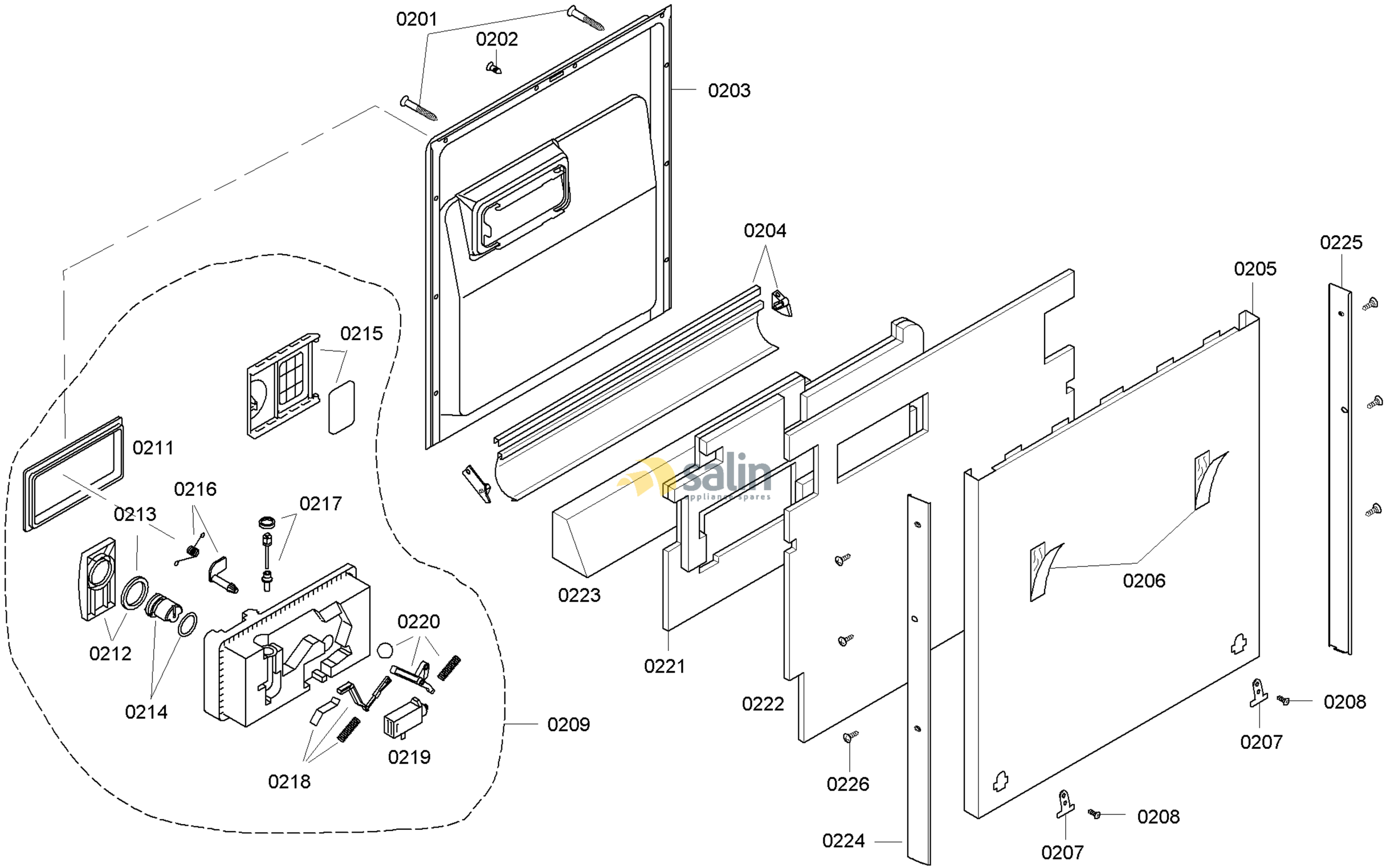

58300000127208 aet 000 c 2/6

FAMILY : SHV98M03UC
MODEL NO: SHV98M03UC/49
Check Position No/Part No or Replacement No

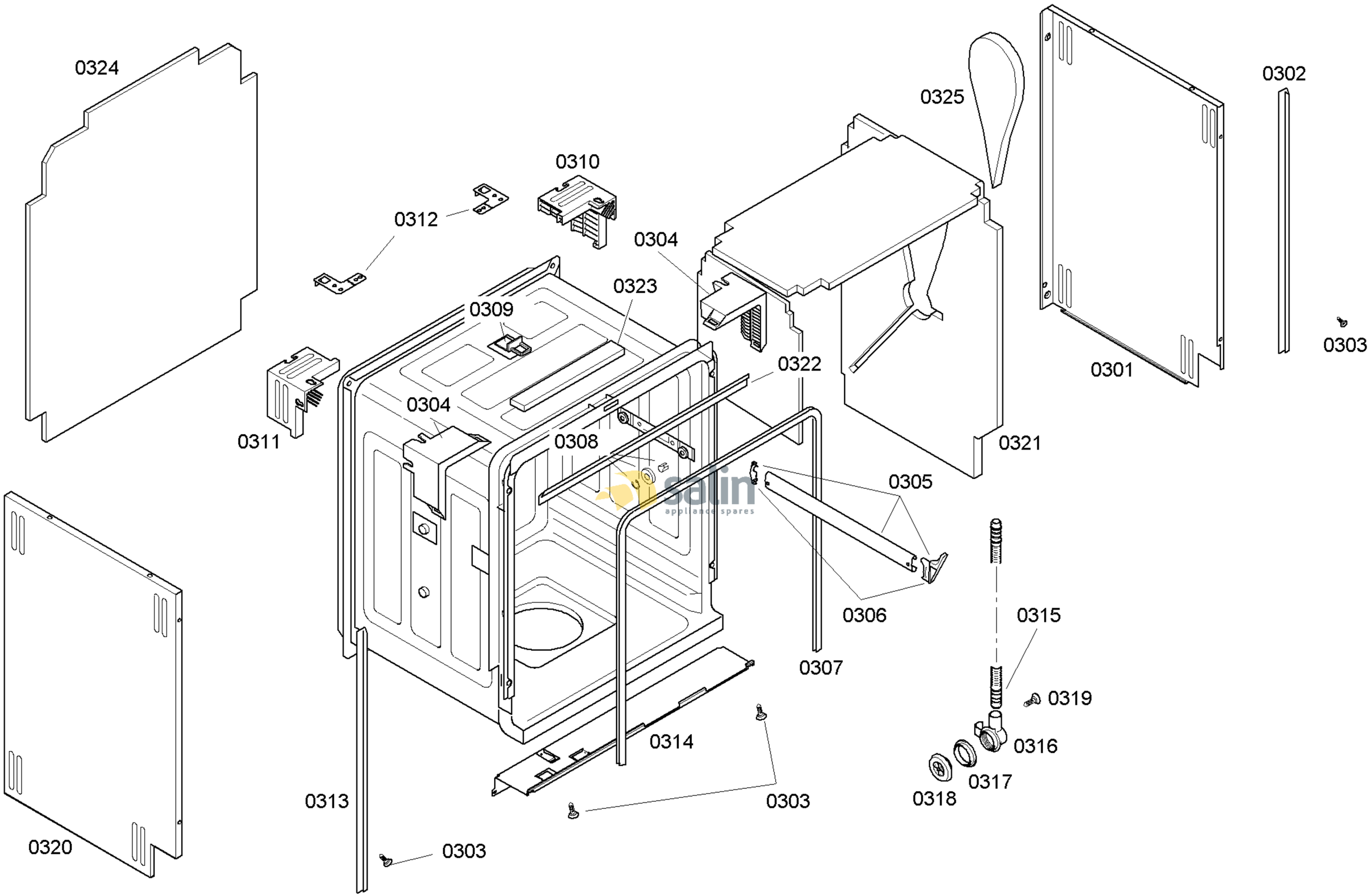

58300000127208 aet 000 c 3/6

FAMILY : SHV98M03UC
MODEL NO: SHV98M03UC/49
Check Position No/Part No or Replacement No

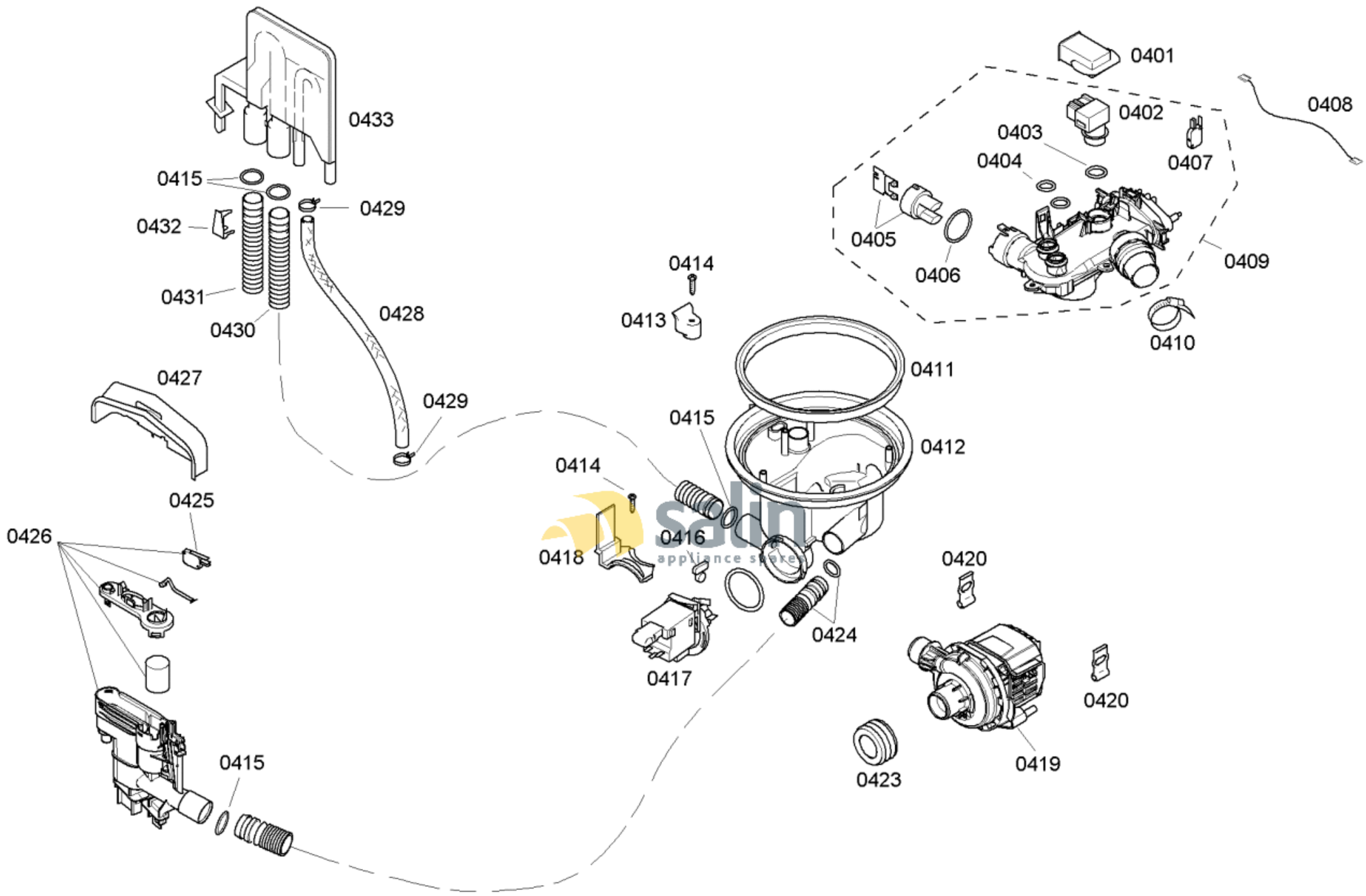

58300000127208 aet 000 c 4/6

FAMILY : SHV98M03UC

MODEL NO: SHV98M03UC/49

Check Position No/Part No or Replacement No

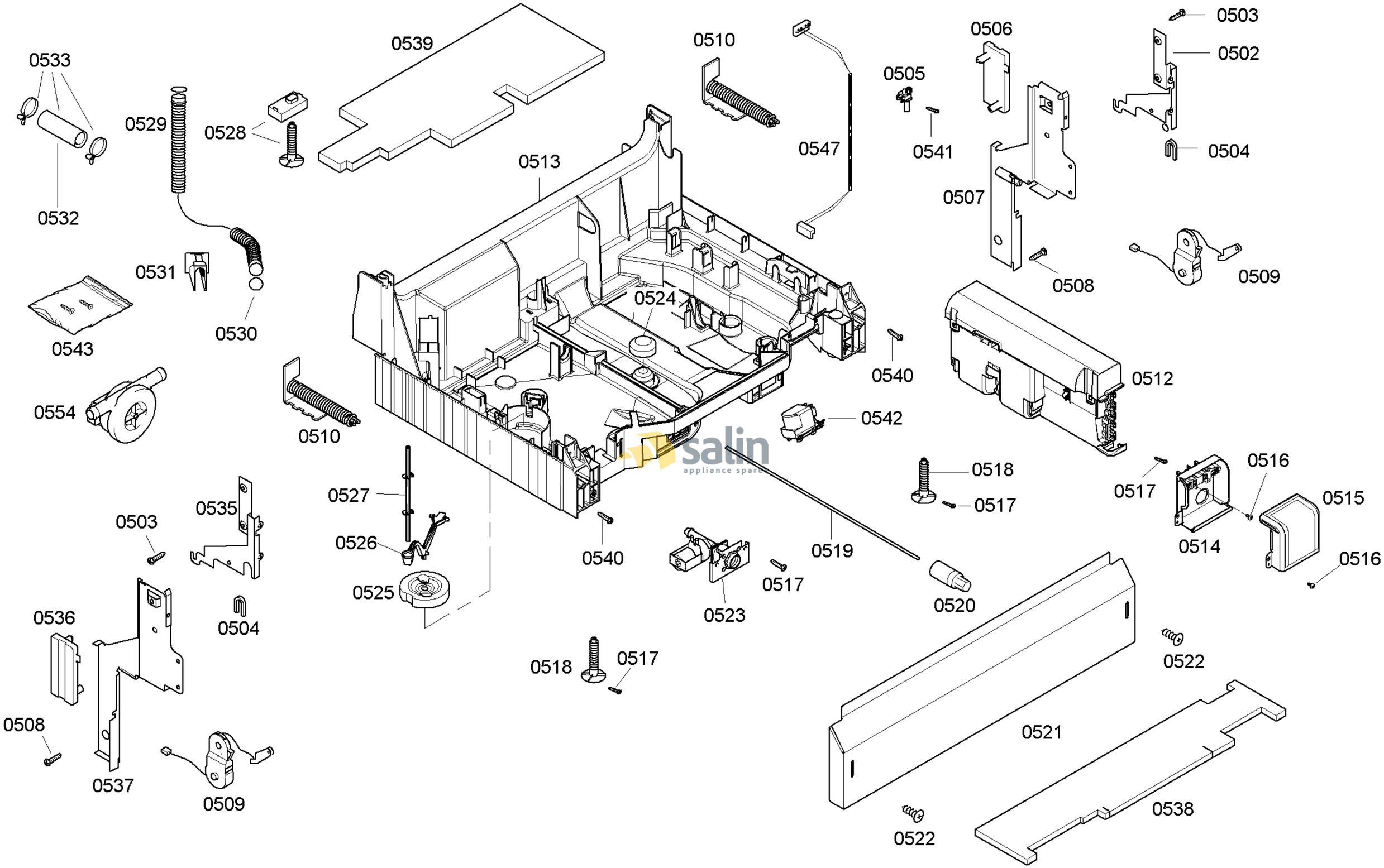

58300000127208 aet 000 c 5/6

FAMILY : SHV98M03UC
MODEL NO: SHV98M03UC/49
Check Position No/Part No or Replacement No

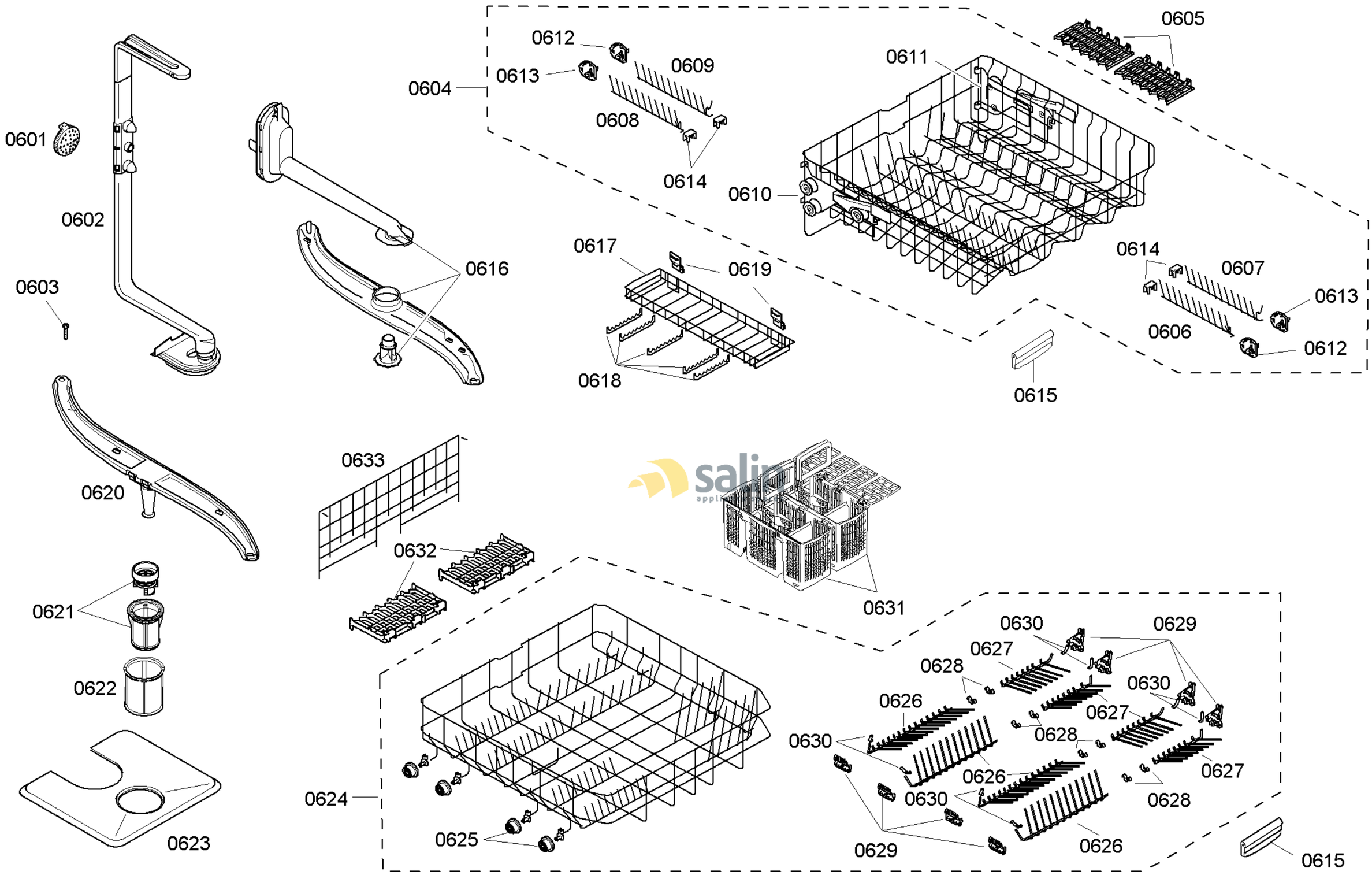

58300000127208 aet 000 c 6/6

FAMILY : SHV98M03UC
MODEL NO: SHV98M03UC/49
Check Position No/Part No or Replacement No