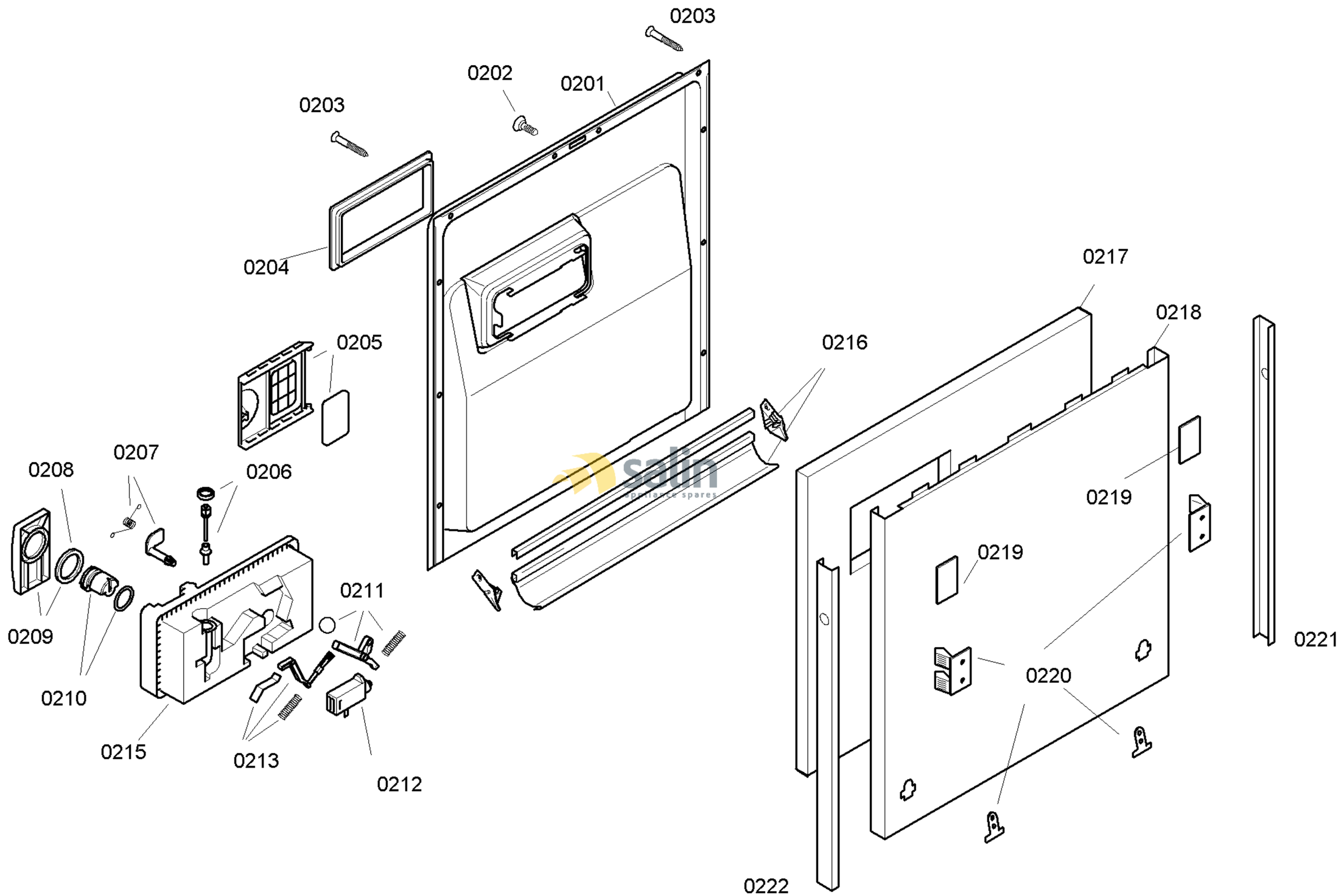

58300000135511 aet 000 a 2/6

FAMILY : SGV43M03EP
MODEL NO: SGV43M03EP/01
Check Position No/Part No or Replacement No

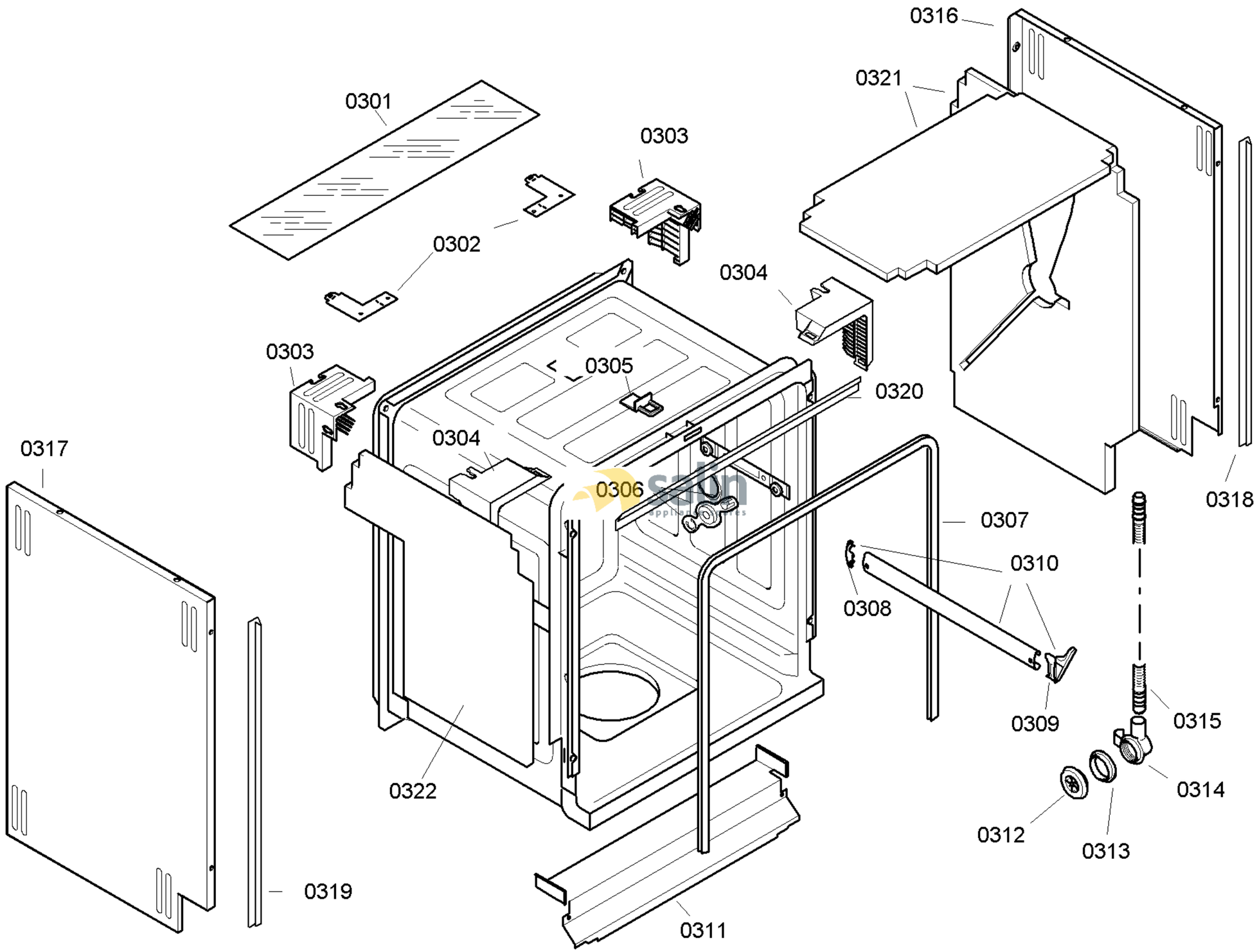

58300000135511 aet 000 a 3/6

FAMILY : SGV43M03EP
MODEL NO: SGV43M03EP/01
Check Position No/Part No or Replacement No

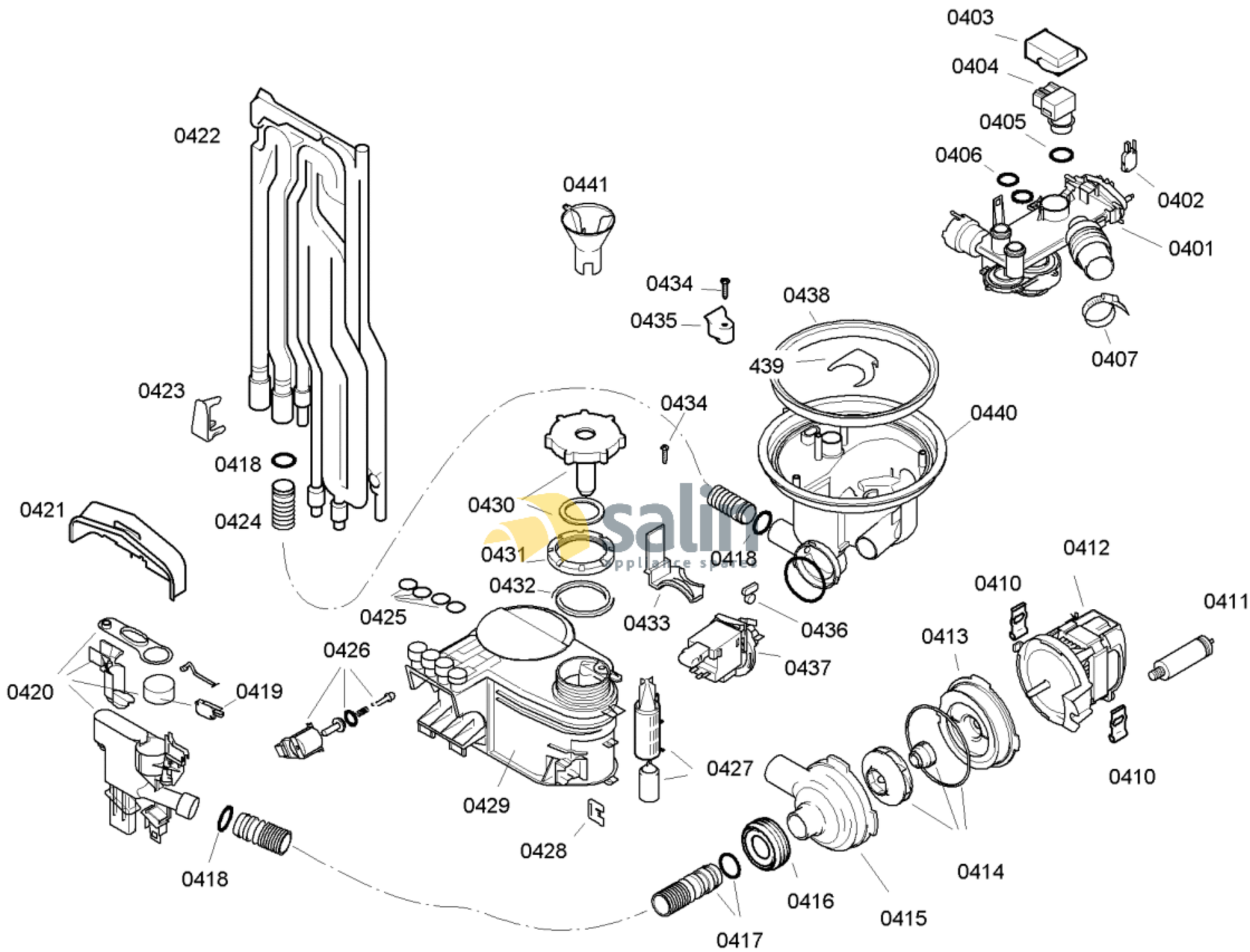

58300000135511 aet 000 a 4/6

FAMILY : SGV43M03EP

MODEL NO: SGV43M03EP/01

Check Position No/Part No or Replacement No

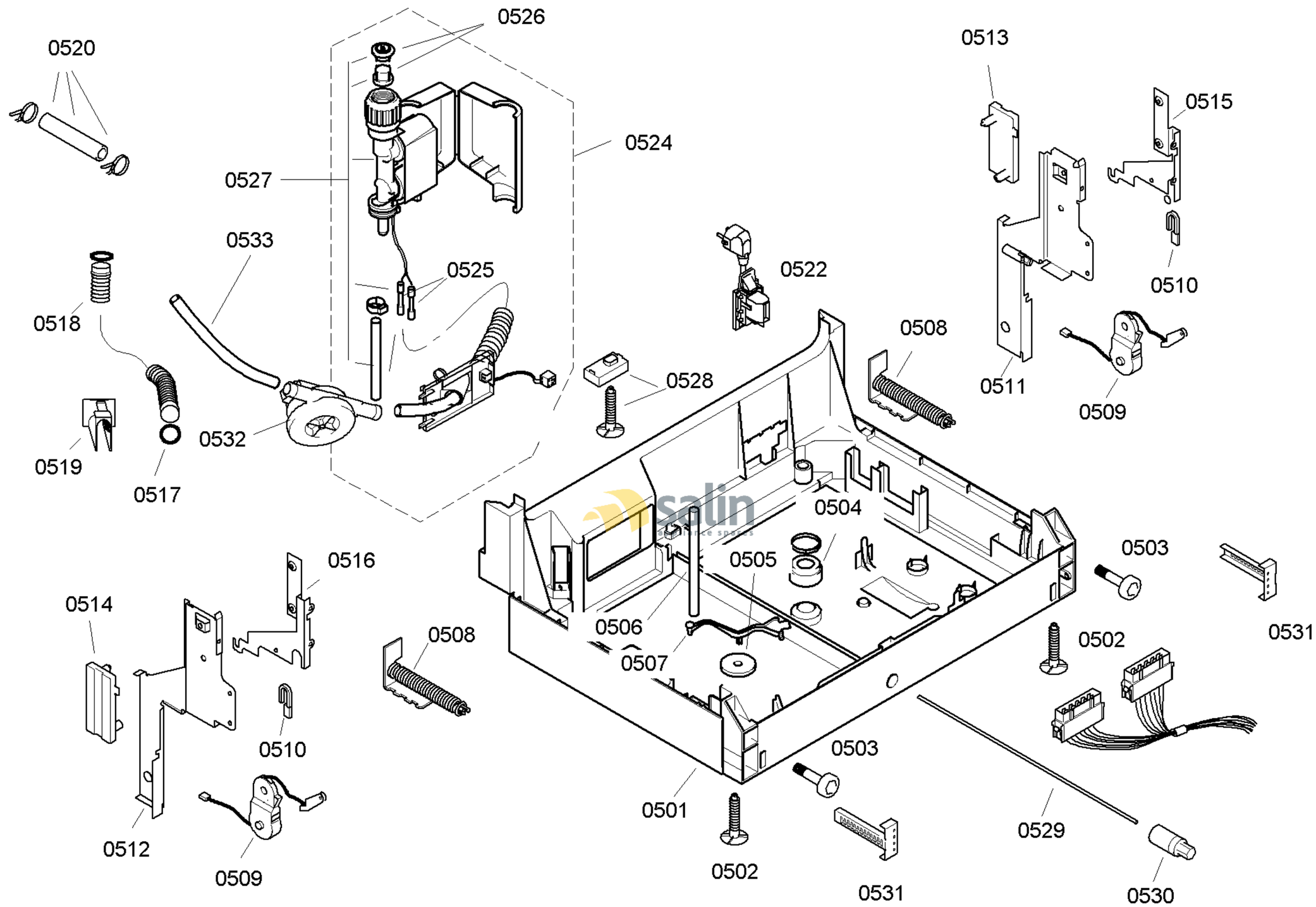

58300000135511 aet 000 a 5/6

FAMILY : SGV43M03EP
MODEL NO: SGV43M03EP/01
Check Position No/Part No or Replacement No

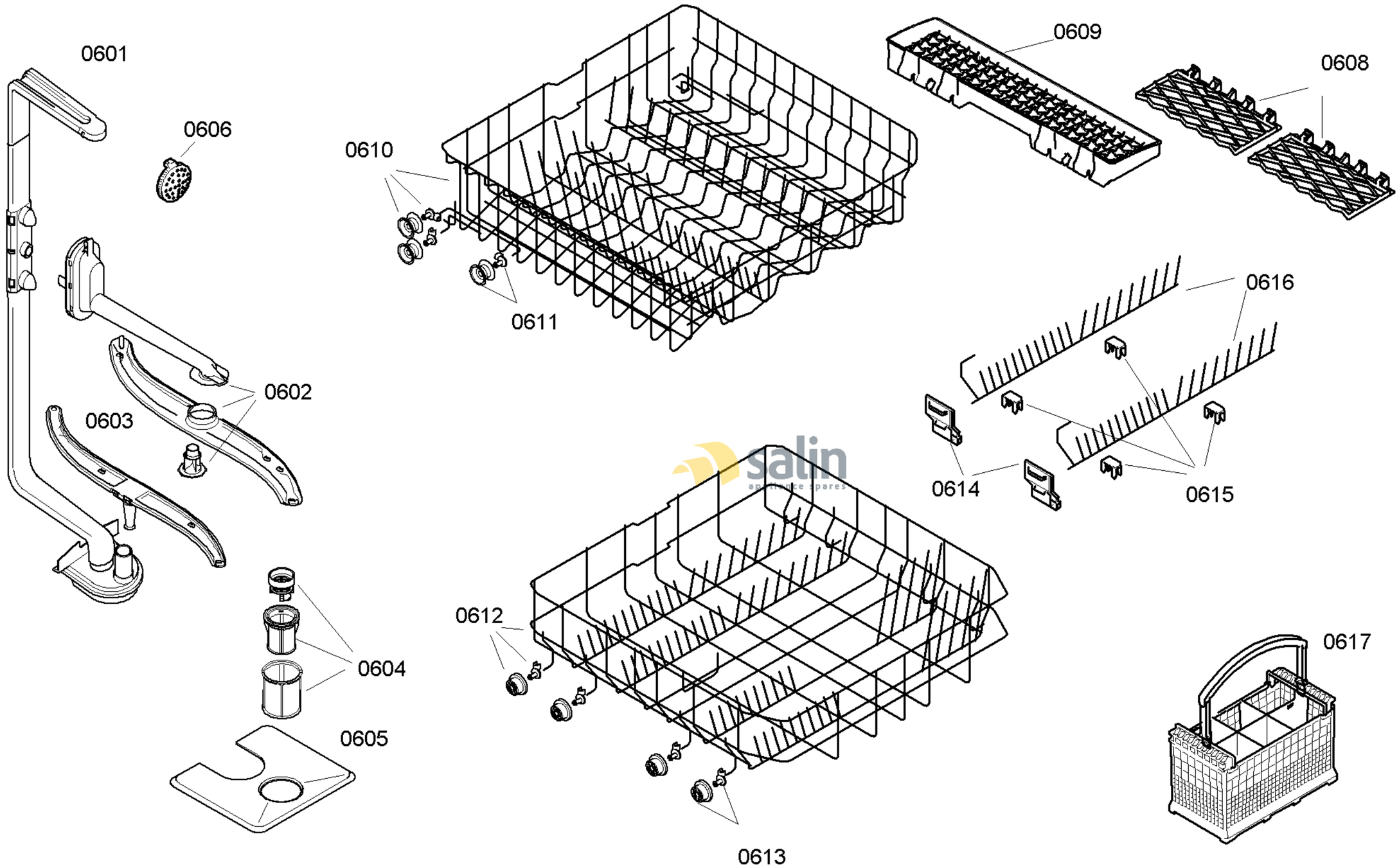

58300000135511 aet 000 a 6/6

FAMILY : SGV43M03EP
MODEL NO: SGV43M03EP/01
Check Position No/Part No or Replacement No