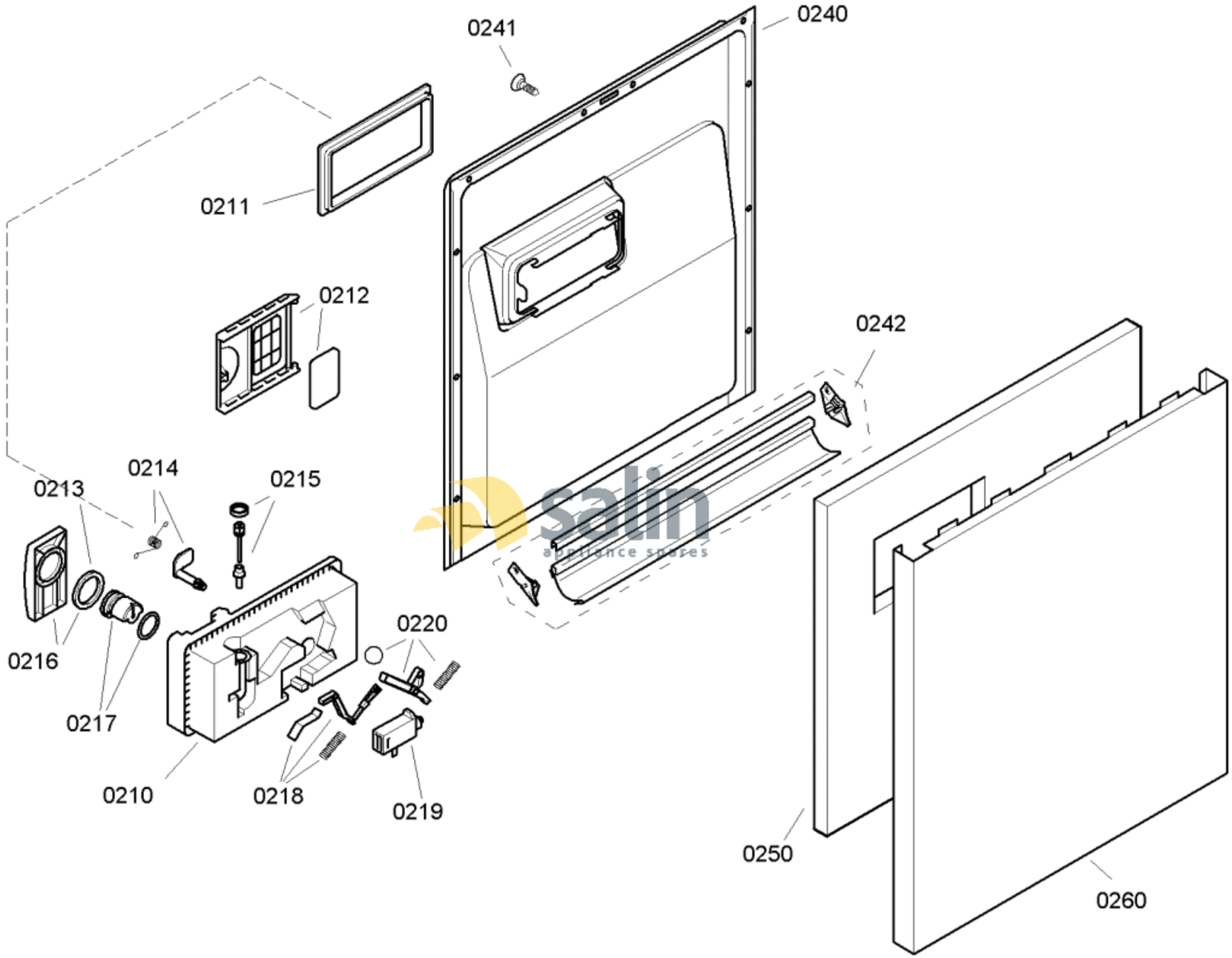

58300000113695 aet 000 b 2/6

FAMILY : SGS57M65EU

MODEL NO: SGS57M65EU/36

Check Position No/Part No or Replacement No

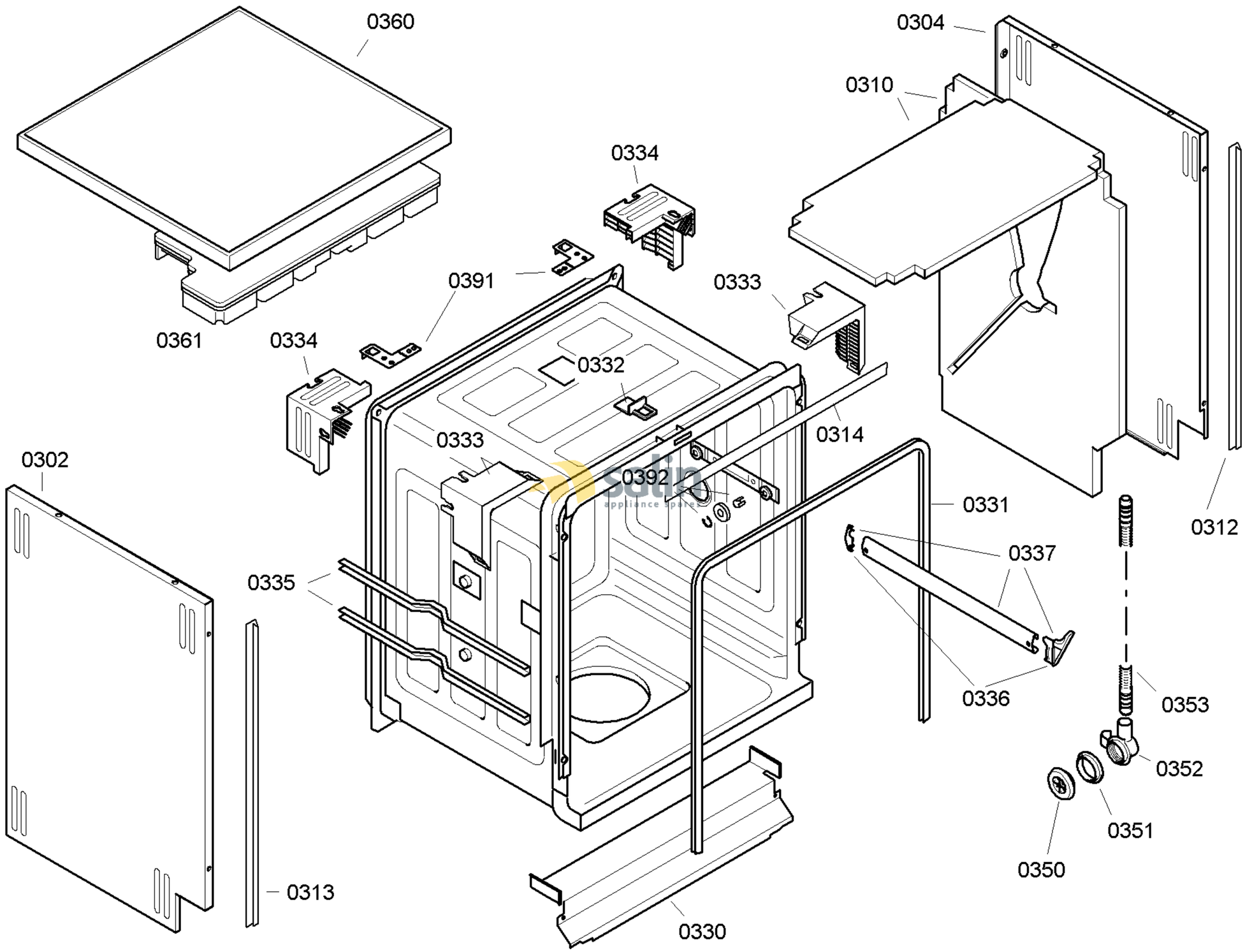

58300000113695 aet 000 b 3/6

FAMILY : SGS57M65EU
MODEL NO: SGS57M65EU/36
Check Position No/Part No or Replacement No

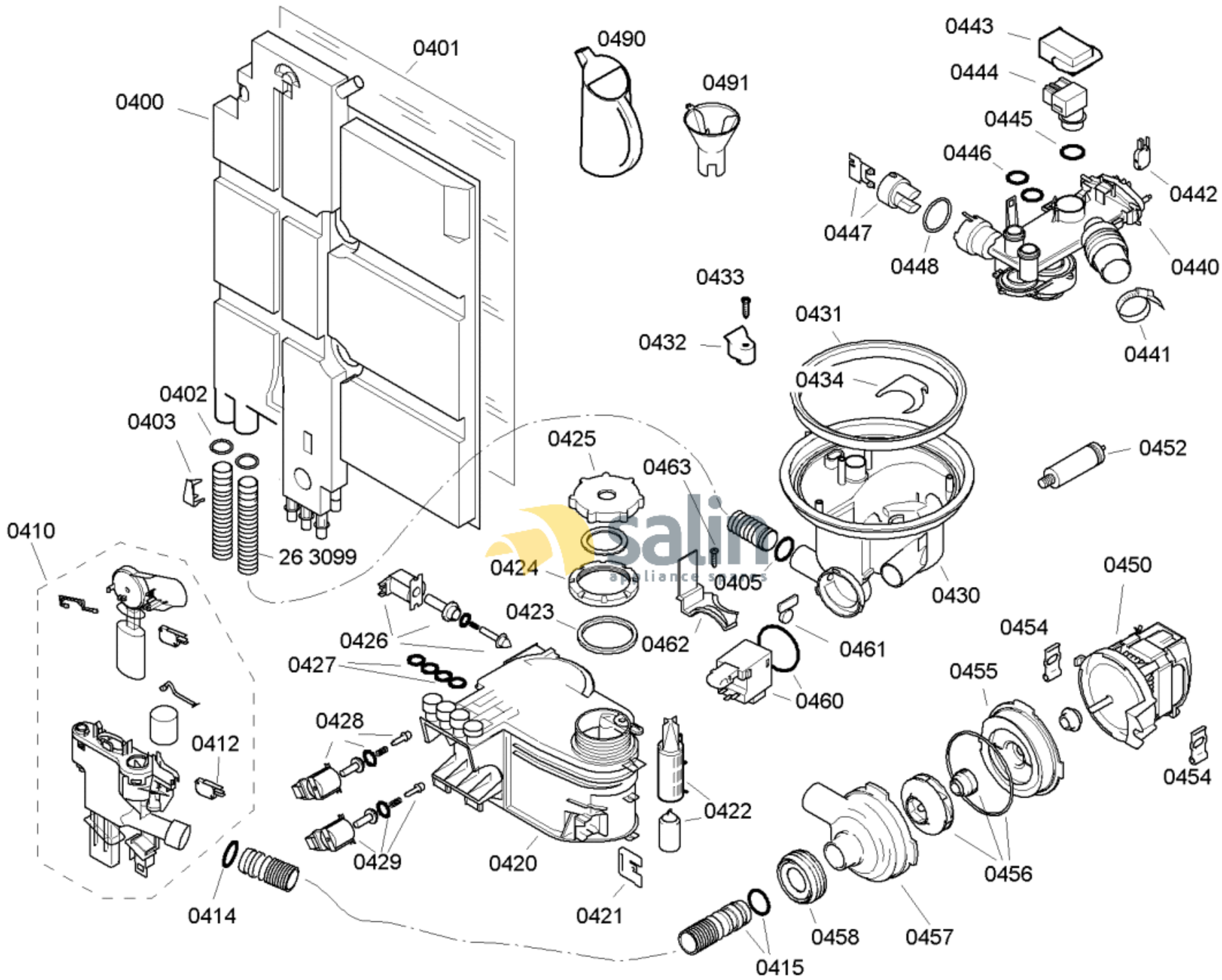

58300000113695 aet 000 b 4/6

FAMILY : SGS57M65EU

MODEL NO: SGS57M65EU/36

Check Position No/Part No or Replacement No

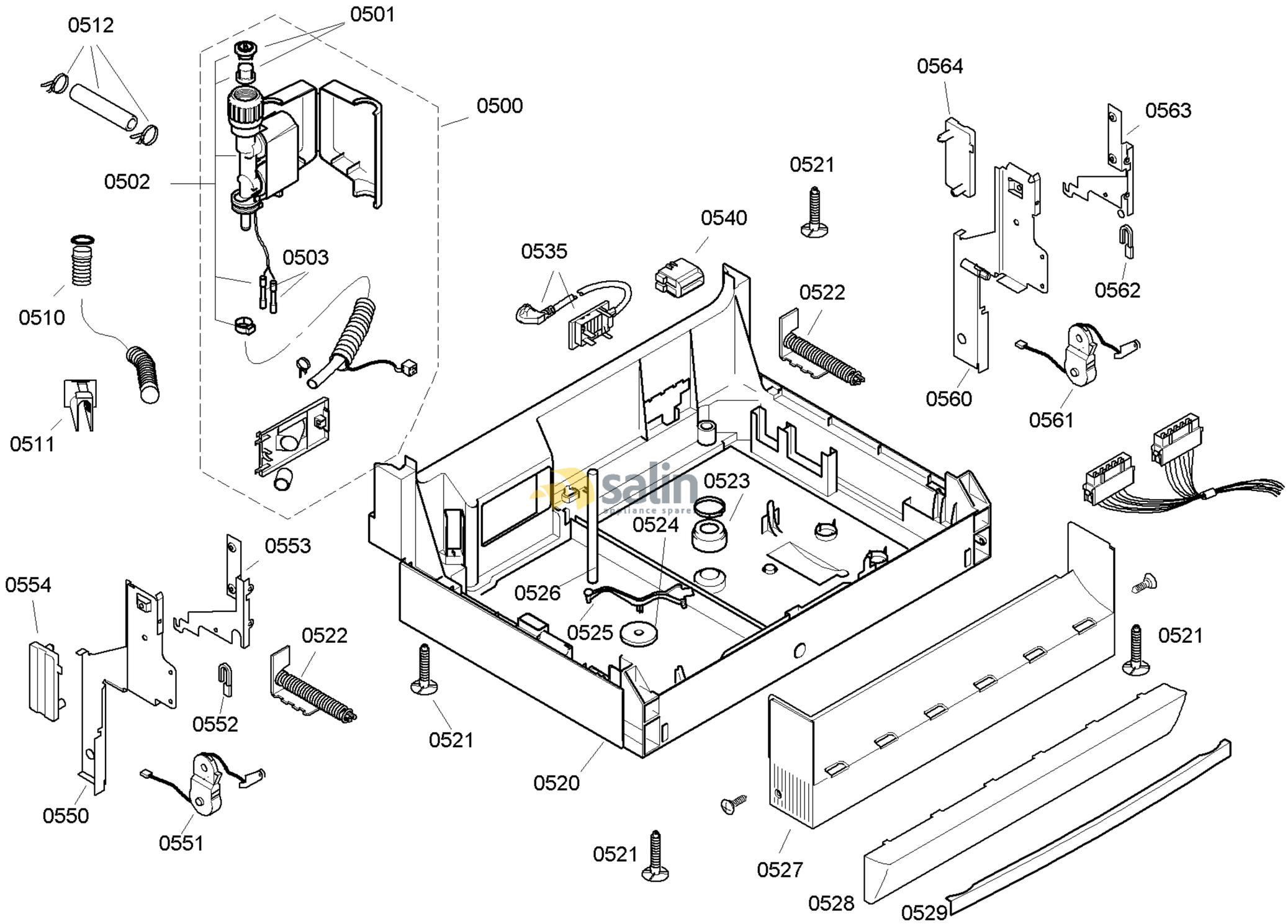

58300000113695 aet 000 b 5/6

FAMILY : SGS57M65EU
MODEL NO: SGS57M65EU/36
Check Position No/Part No or Replacement No

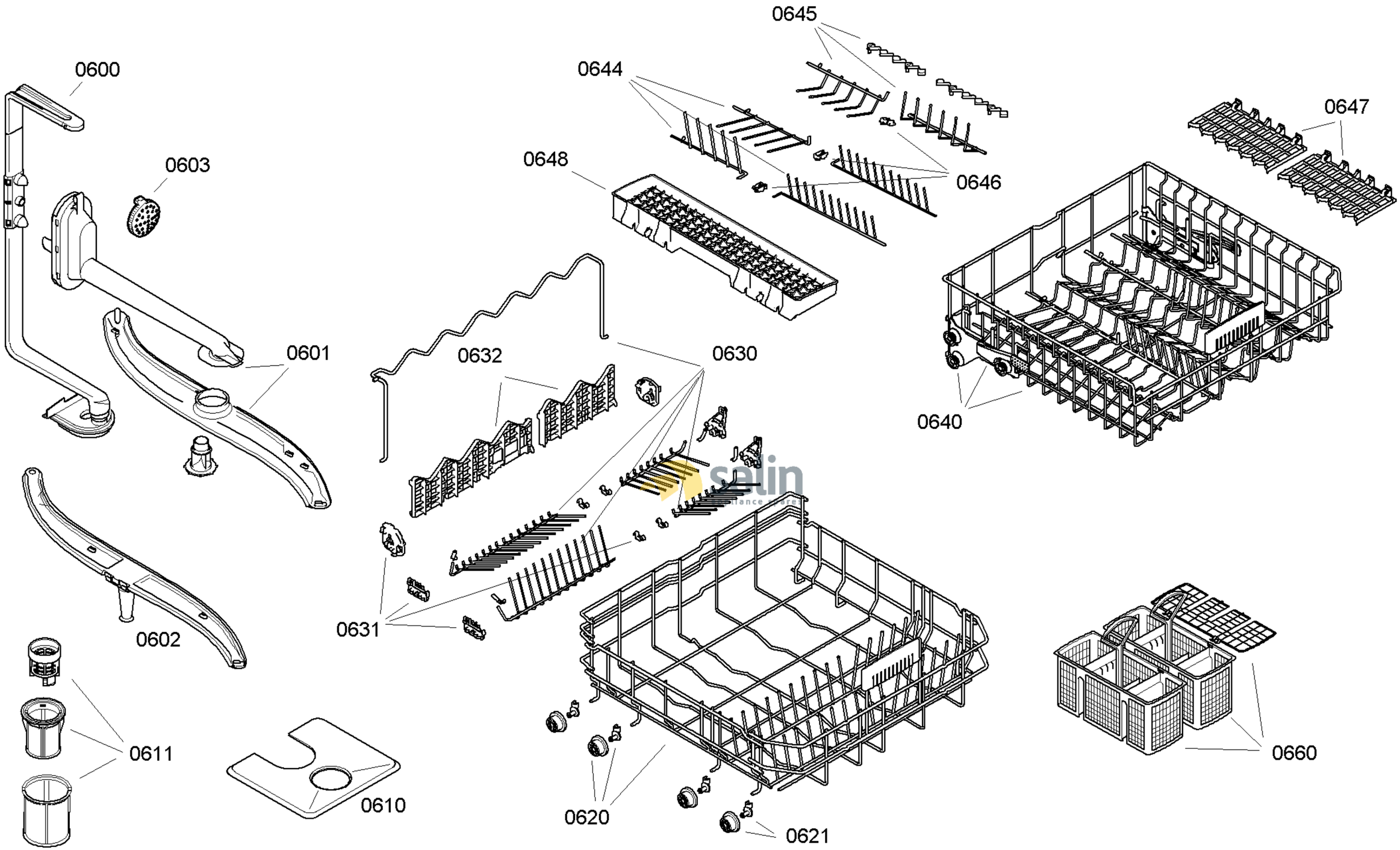

58300000113695 aet 000 b 6/6

FAMILY : SGS57M65EU
MODEL NO: SGS57M65EU/36
Check Position No/Part No or Replacement No