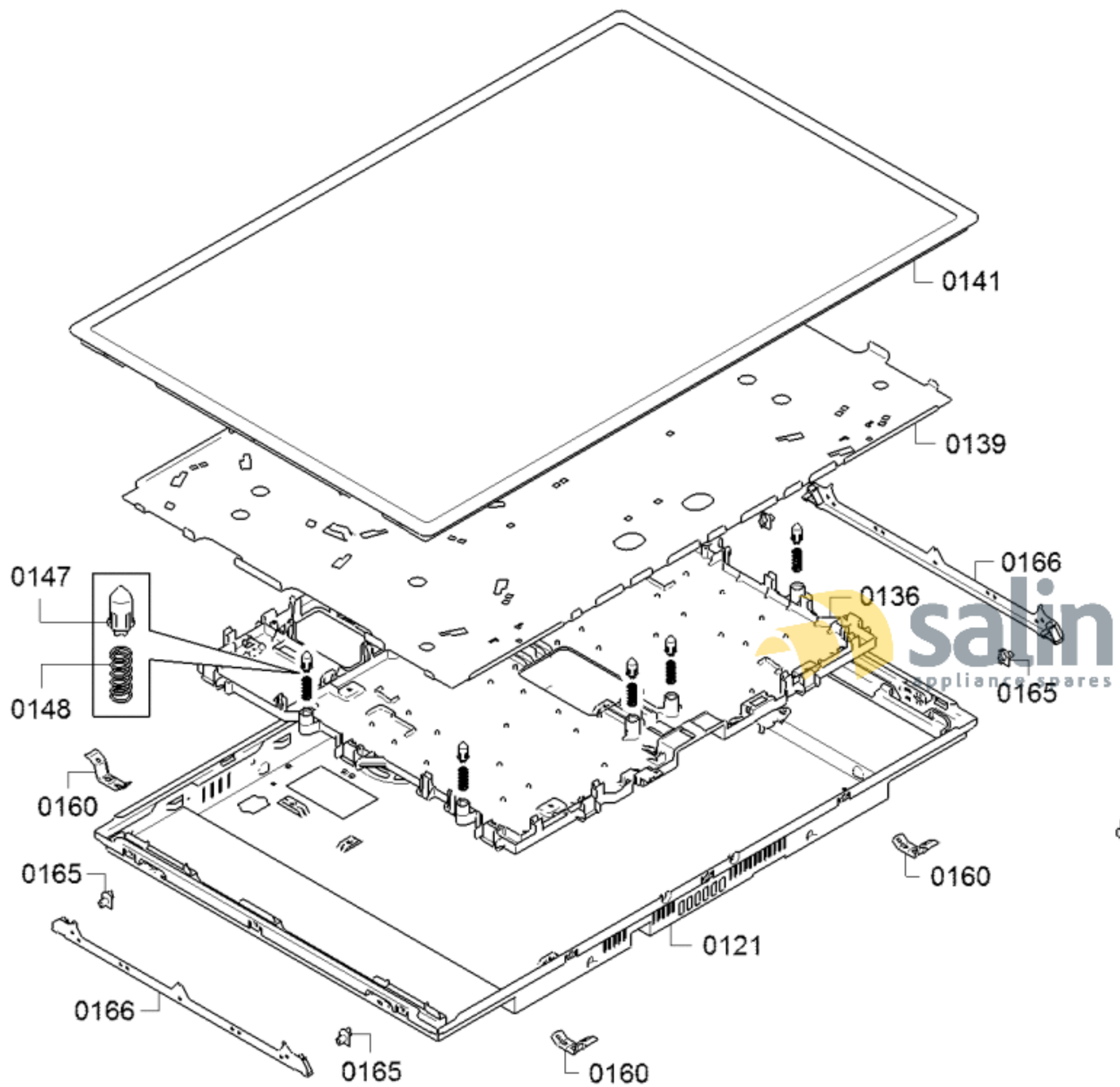

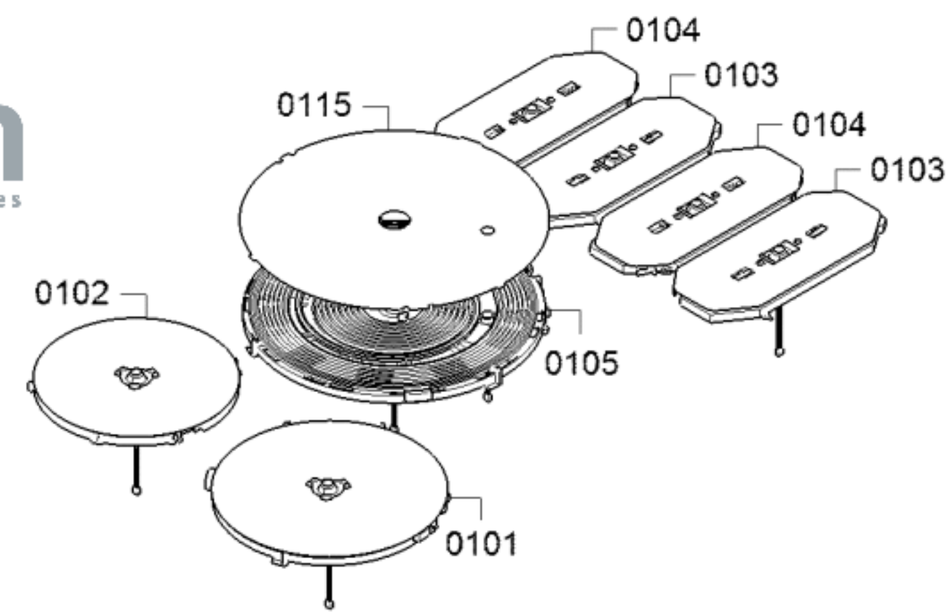

58300000198915 aet 000 a 1/2

FAMILY : PXV845FC1E

MODEL NO: PXV845FC1E/03

Check Position No/Part No or Replacement No

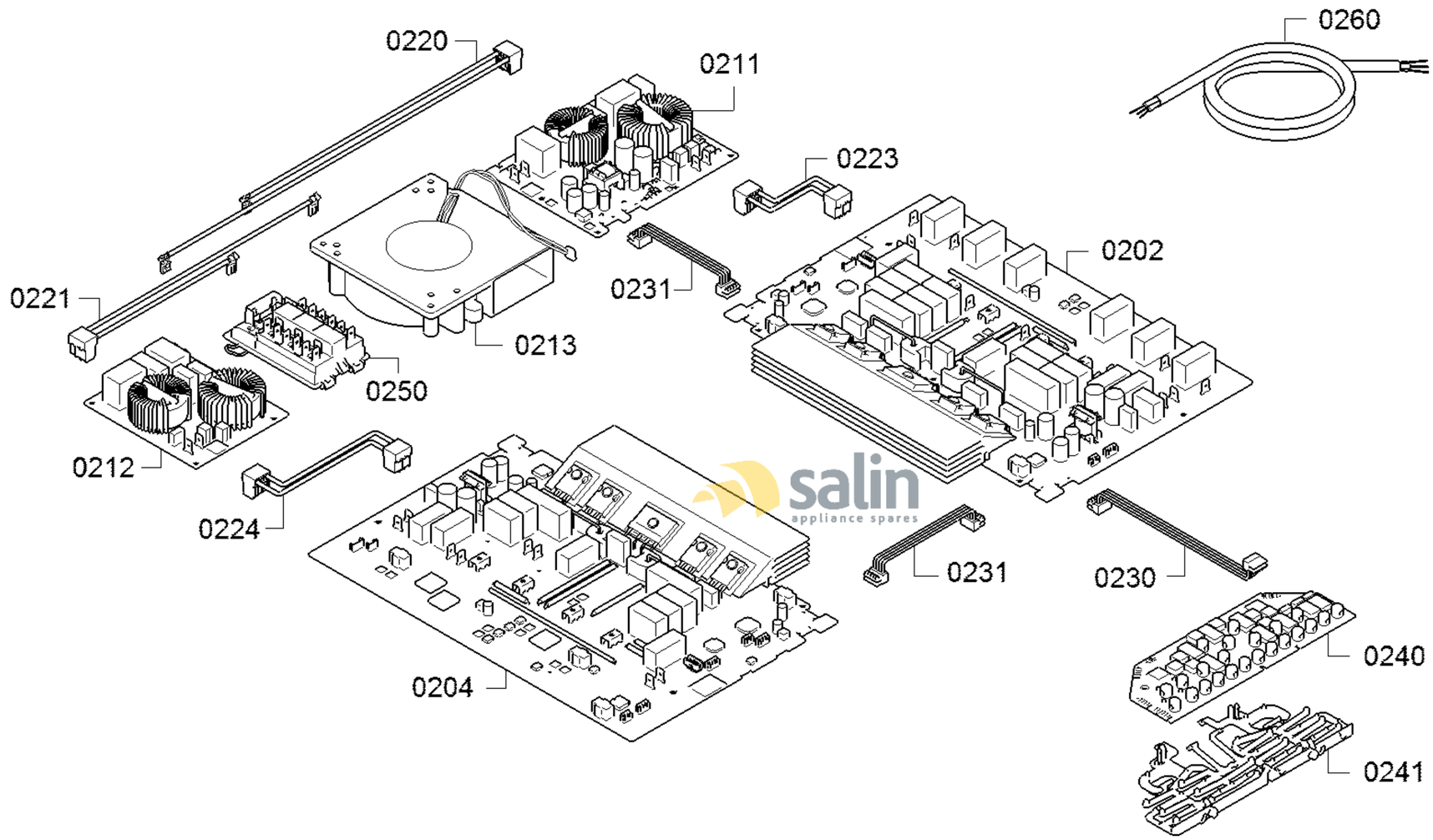

58300000198915 aet 000 a 2/2

FAMILY : PXV845FC1E
MODEL NO: PXV845FC1E/03
Check Position No/Part No or Replacement No