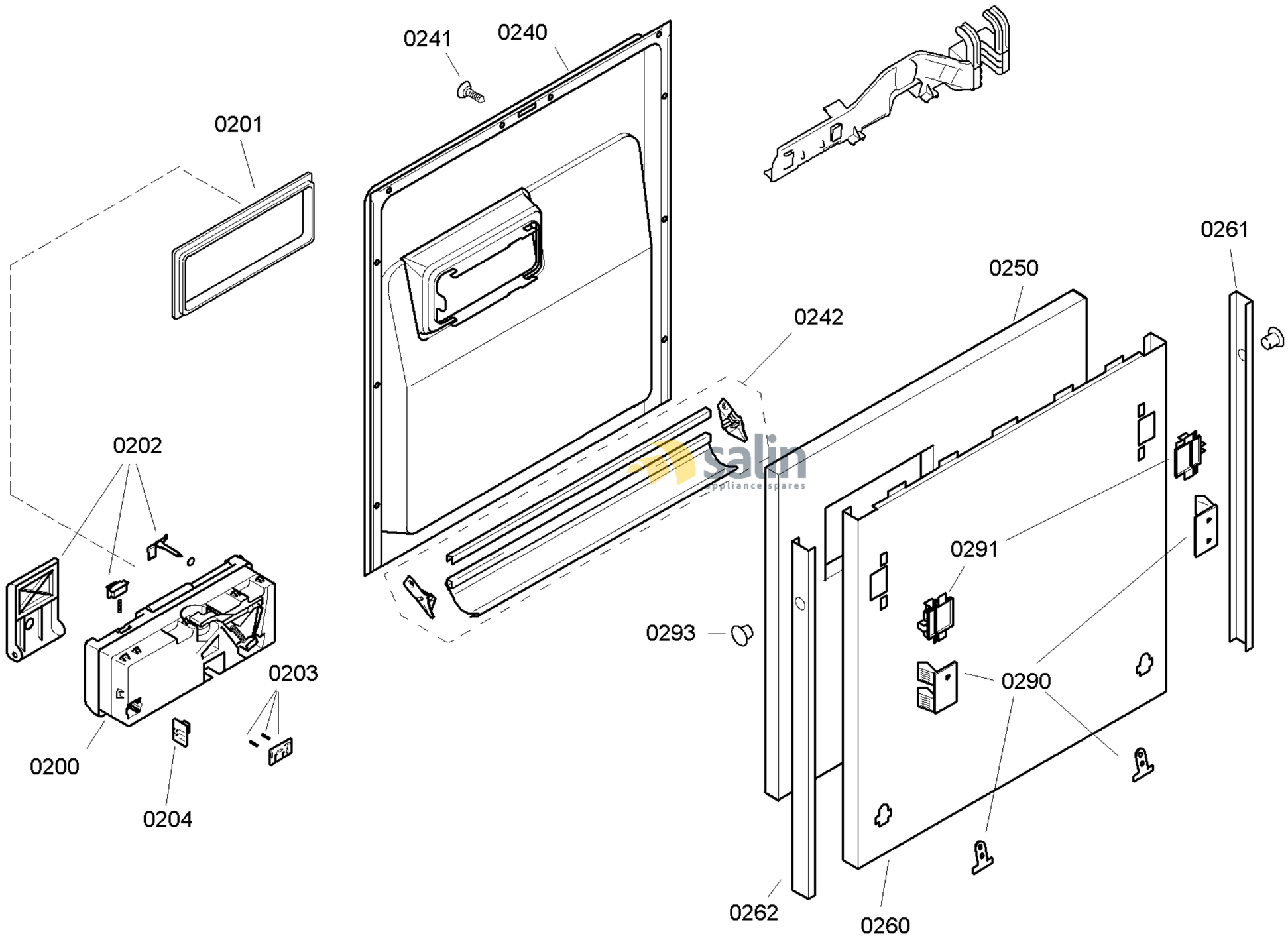

58300000114055 aet 000 c 2/6

FAMILY : SGV67T03TC
MODEL NO: SGV67T03TC/07
Check Position No/Part No or Replacement No

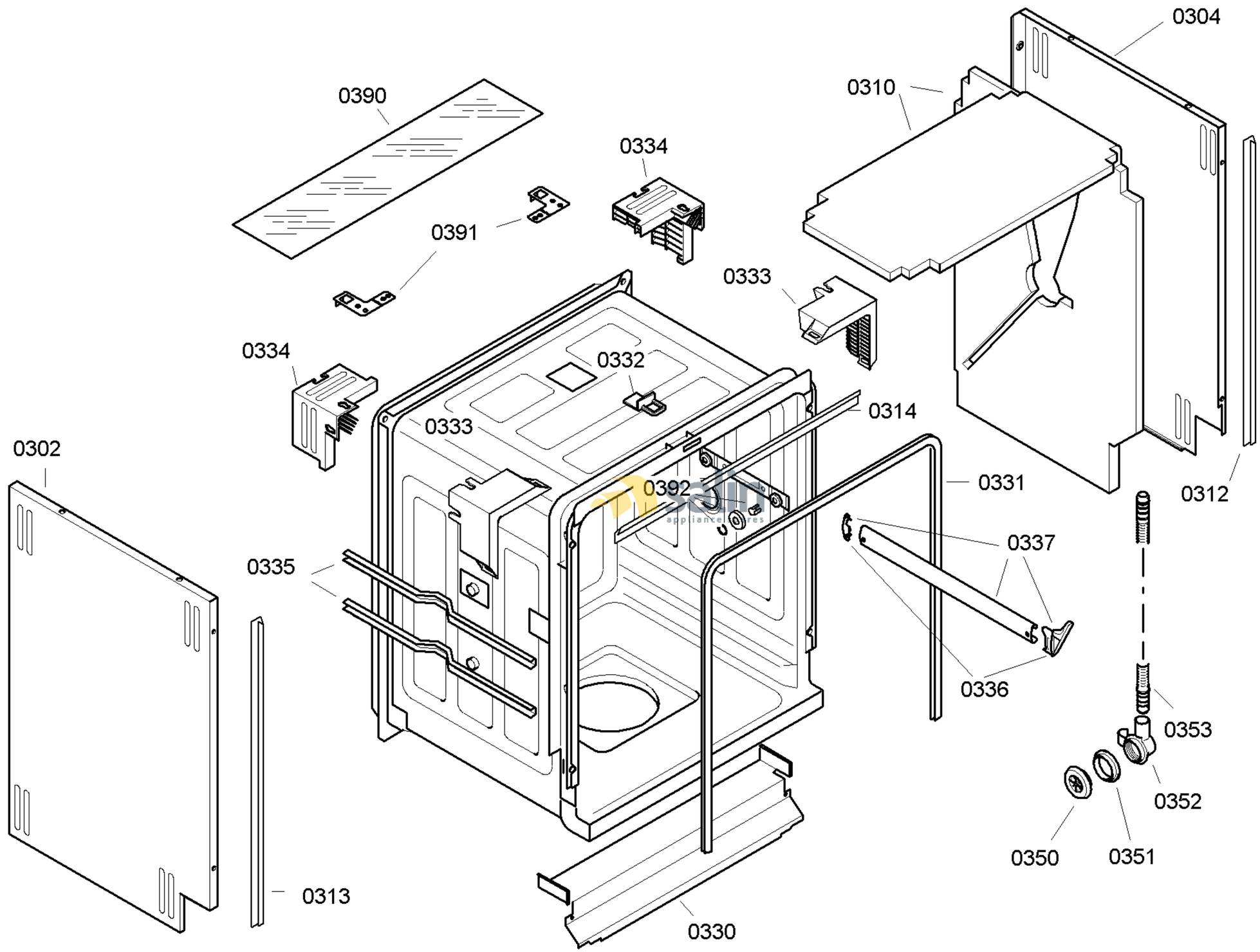

58300000114055 aet 000 c 3/6

FAMILY : SGV67T03TC
MODEL NO: SGV67T03TC/07
Check Position No/Part No or Replacement No

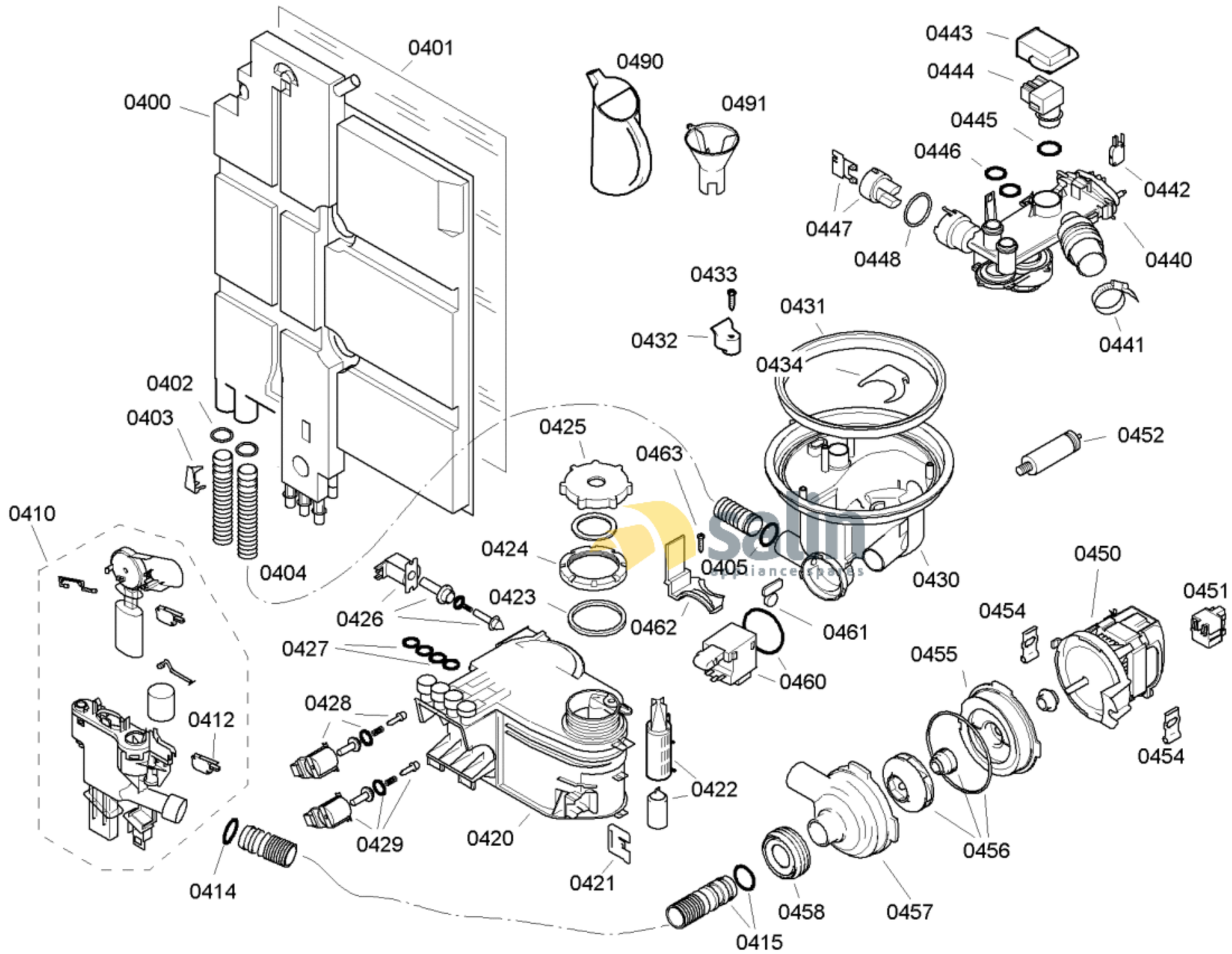

58300000114055 aet 000 c 4/6

FAMILY : SGV67T03TC

MODEL NO: SGV67T03TC/07

Check Position No/Part No or Replacement No

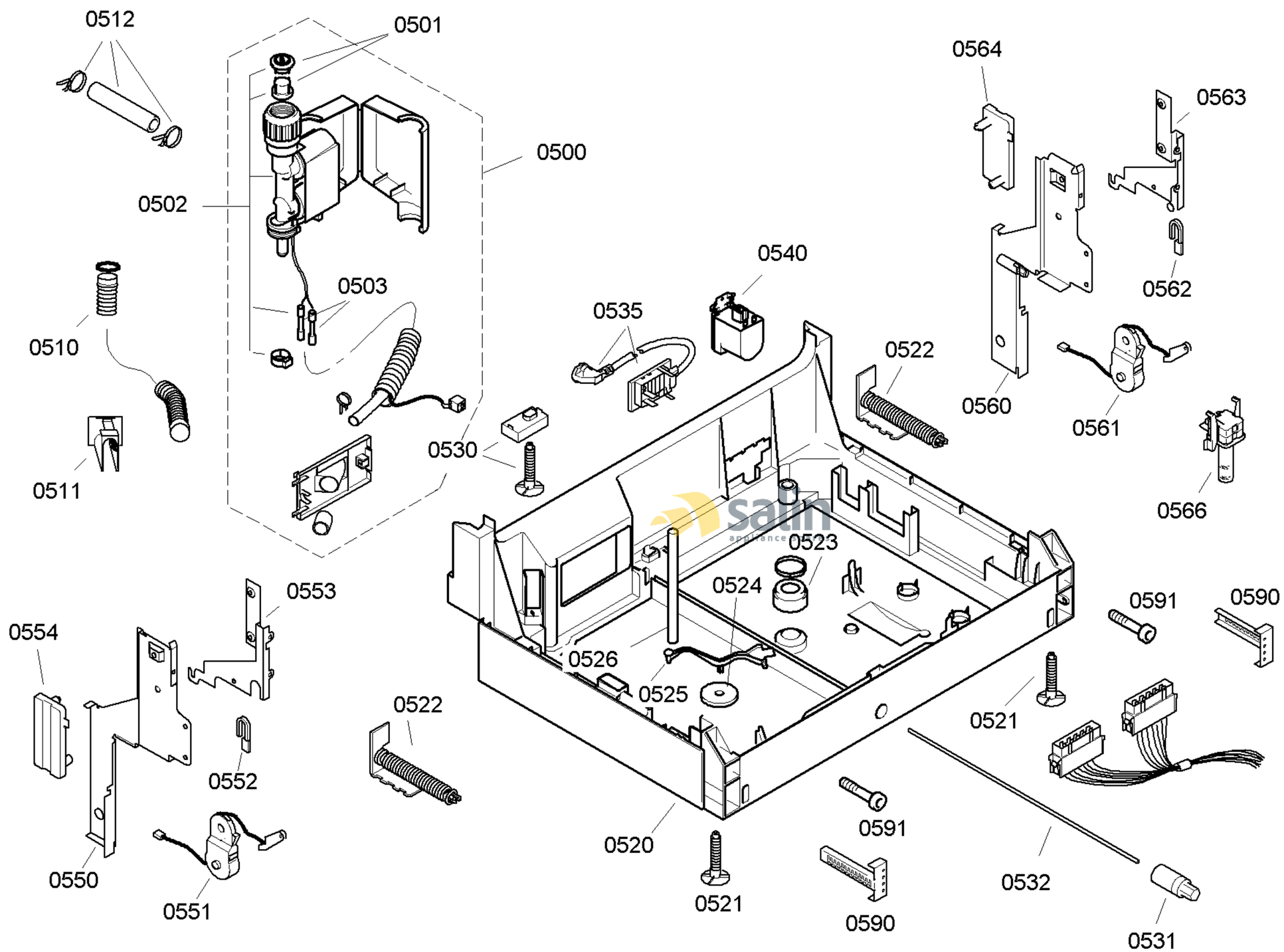

58300000114055 aet 000 c 5/6

FAMILY : SGV67T03TC
MODEL NO: SGV67T03TC/07
Check Position No/Part No or Replacement No

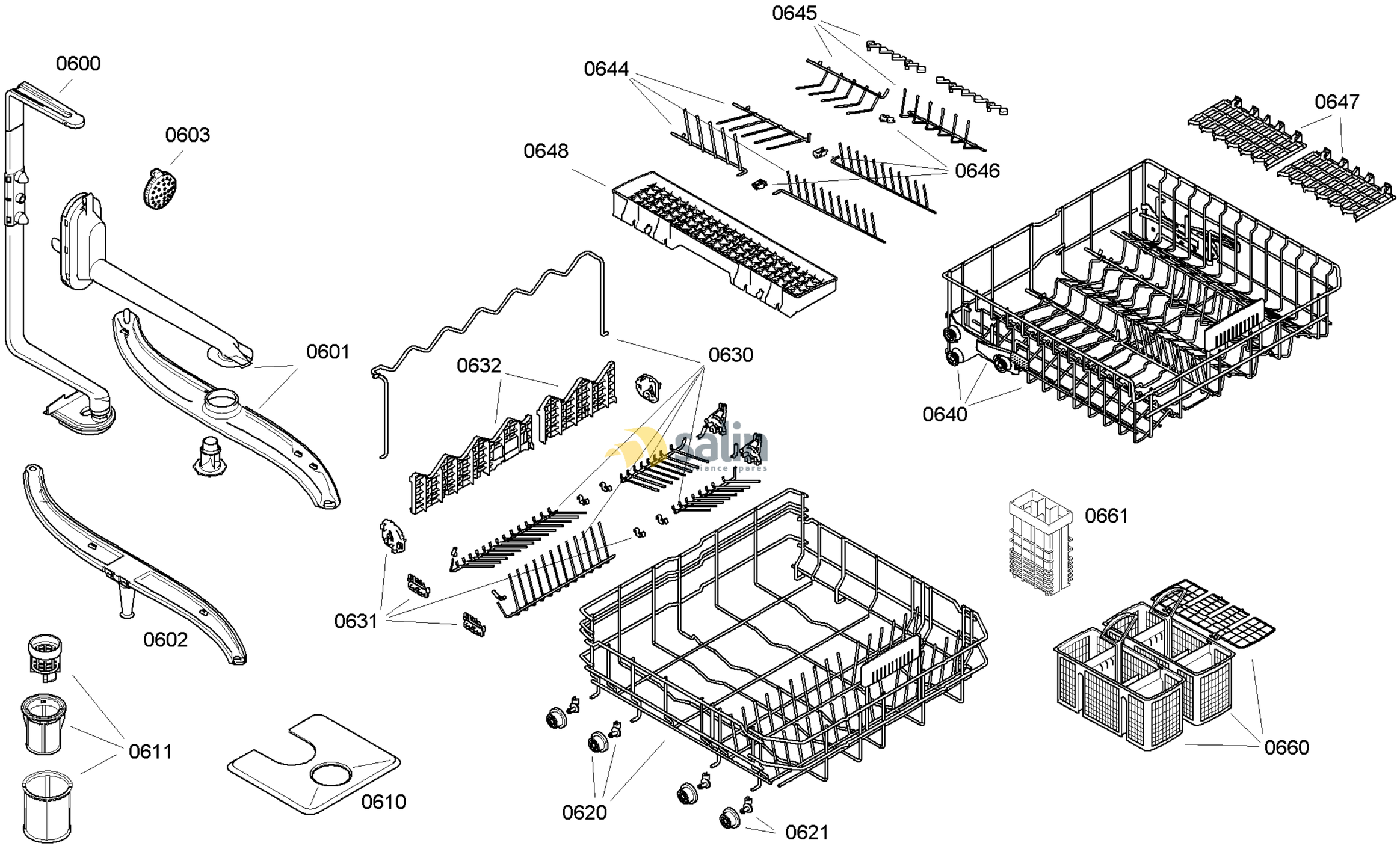

58300000114055 aet 000 c 6/6

FAMILY : SGV67T03TC
MODEL NO: SGV67T03TC/07
Check Position No/Part No or Replacement No