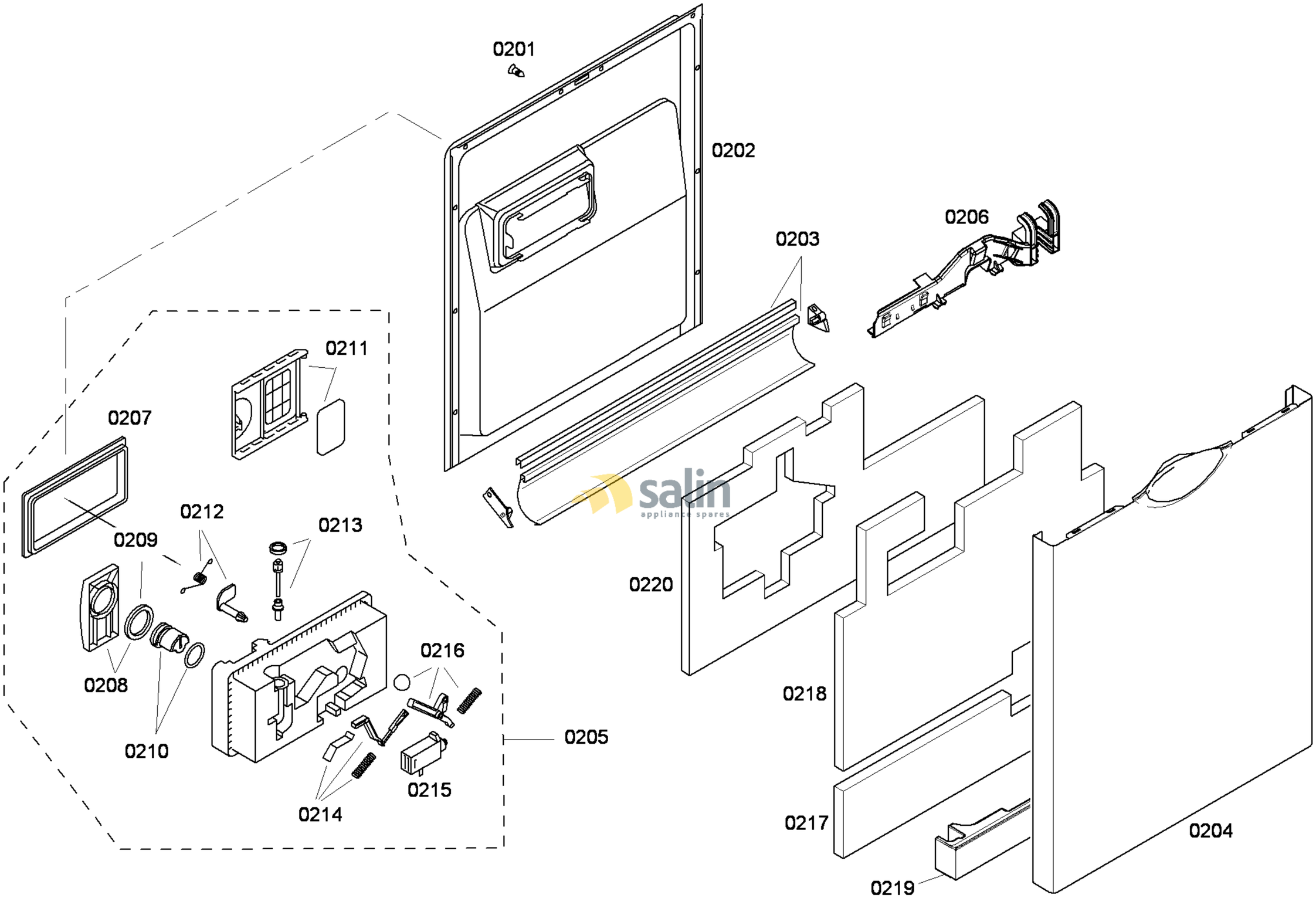

58300000140126 aet 000 b 2/6

FAMILY : SHE43M06UC
MODEL NO: SHE43M06UC/53
Check Position No/Part No or Replacement No

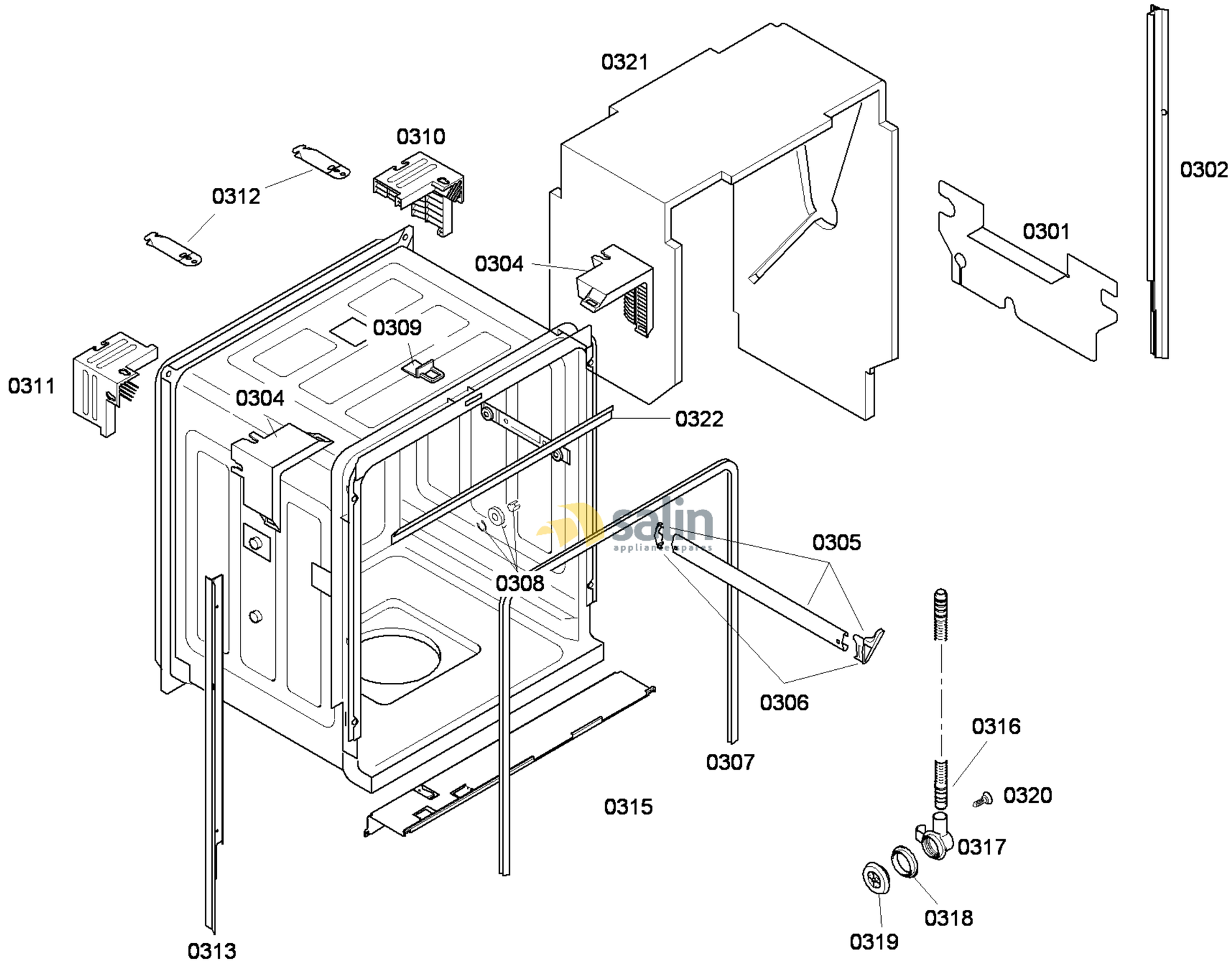

58300000140126 aet 000 b 3/6

FAMILY : SHE43M06UC
MODEL NO: SHE43M06UC/53
Check Position No/Part No or Replacement No

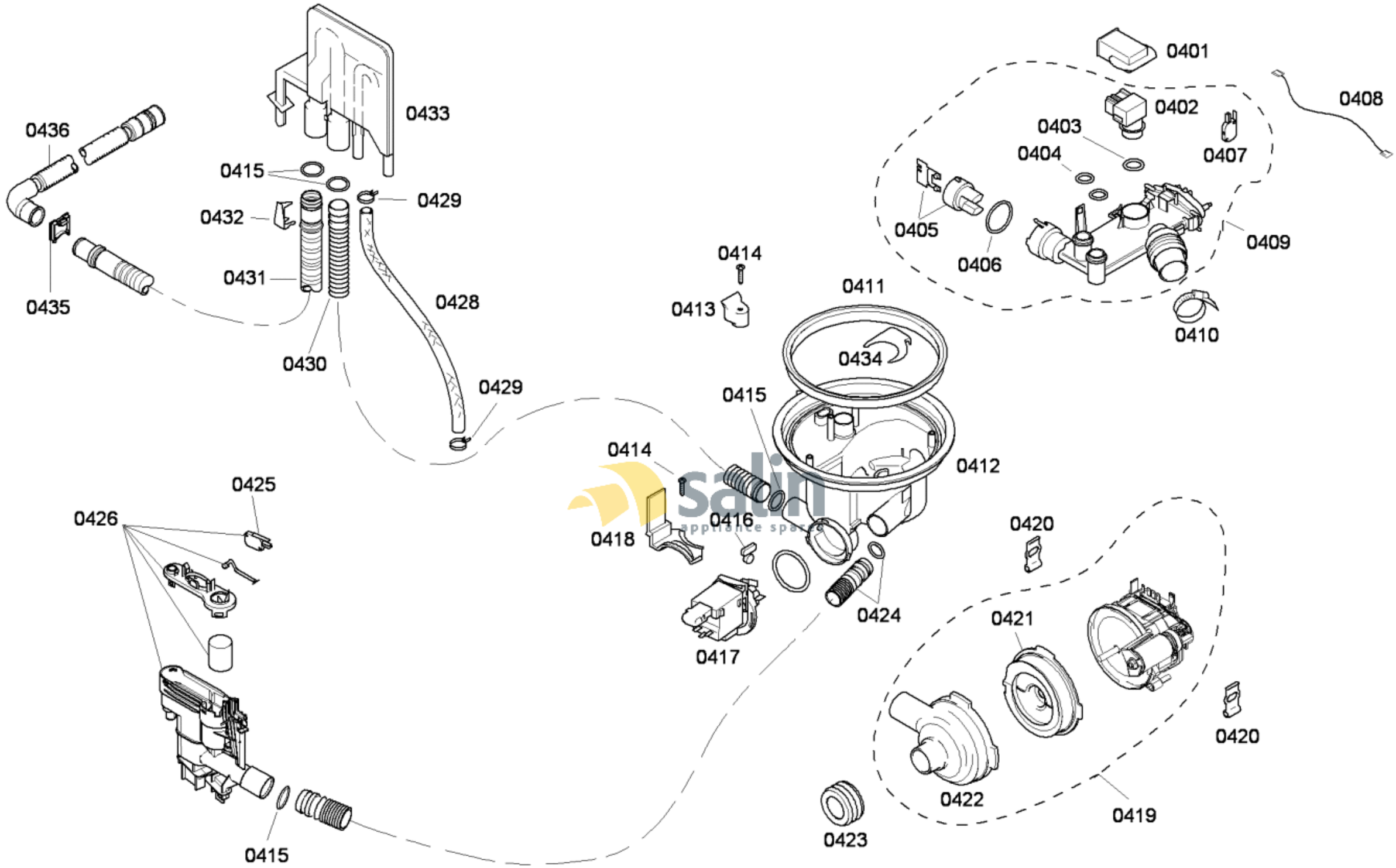

58300000140126 aet 000 b 4/6

FAMILY : SHE43M06UC

MODEL NO: SHE43M06UC/53

Check Position No/Part No or Replacement No

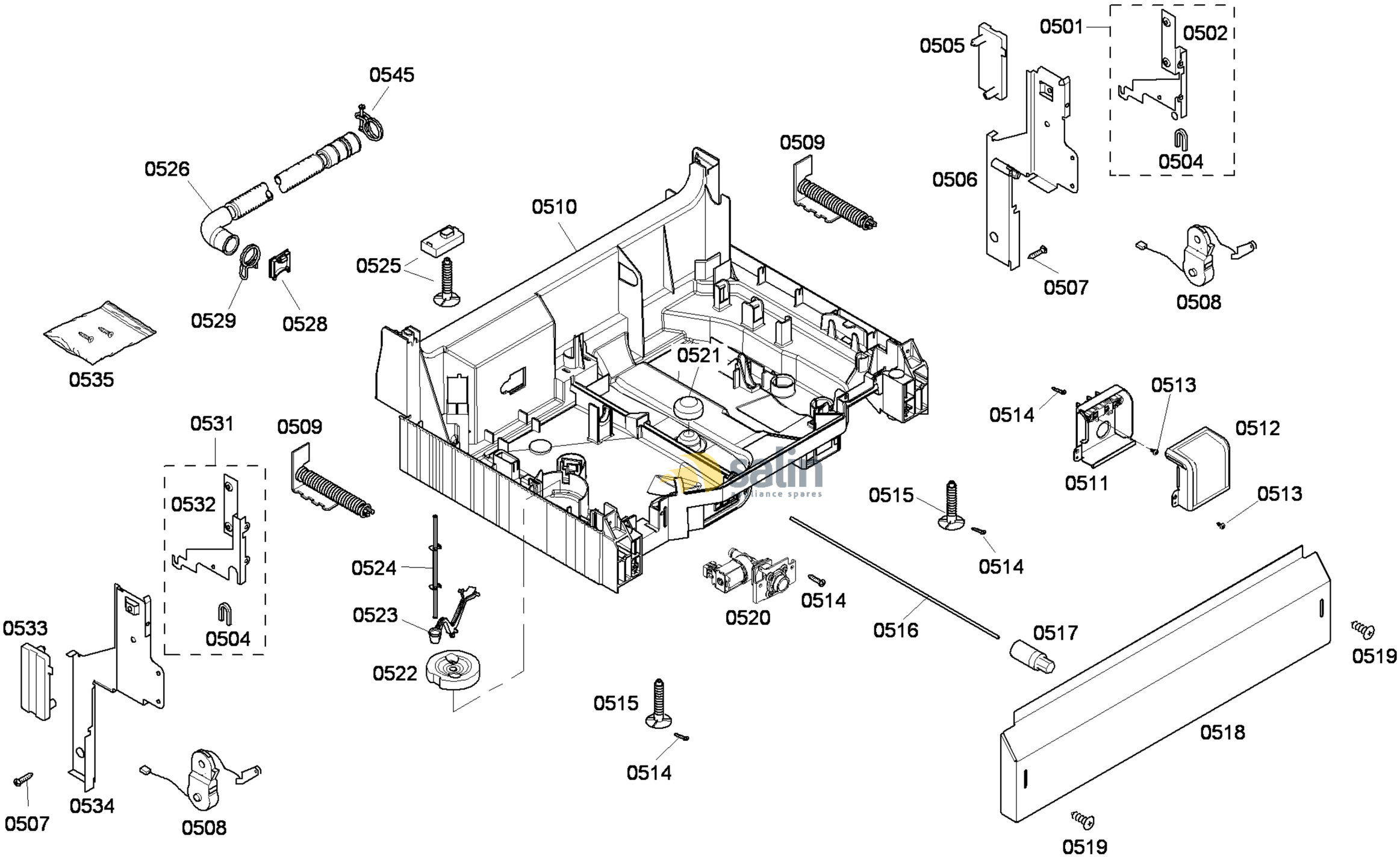

58300000140126 aet 000 b 5/6

FAMILY : SHE43M06UC
MODEL NO: SHE43M06UC/53
Check Position No/Part No or Replacement No

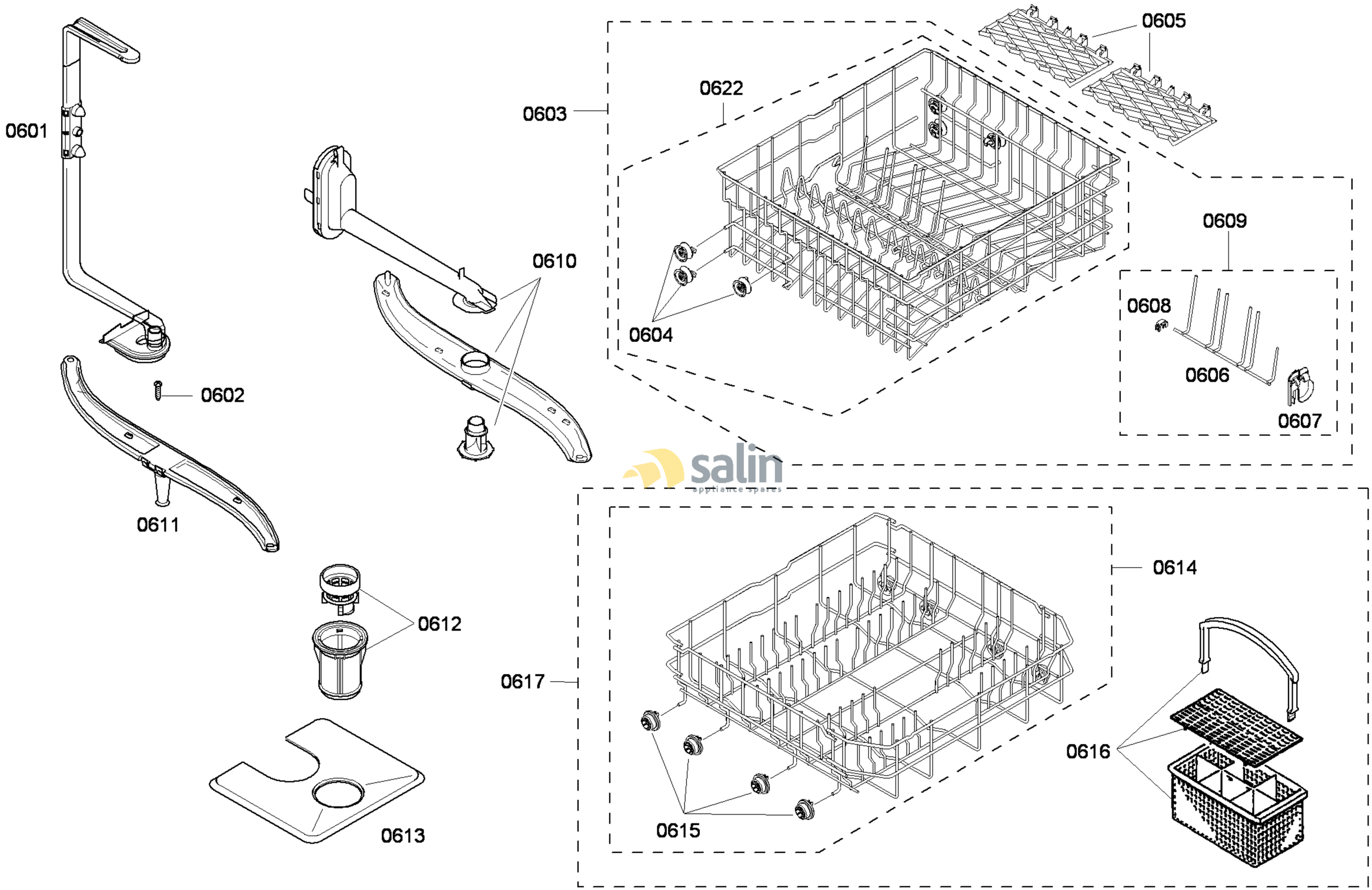

salin
appliance spares

58300000140126 aet 000 b 6/6

FAMILY : SHE43M06UC
MODEL NO: SHE43M06UC/53
Check Position No/Part No or Replacement No