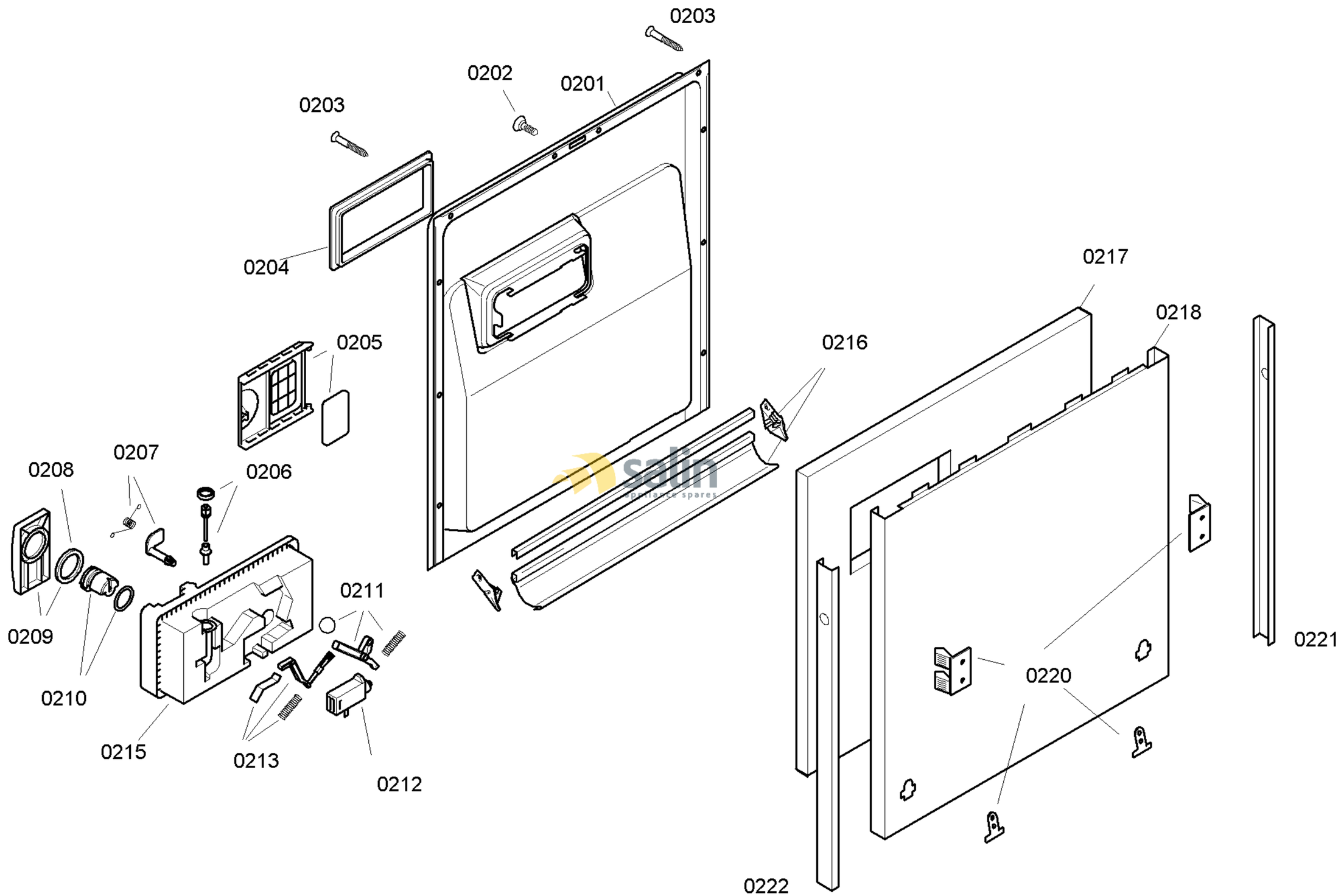

58300000130490 aet 000 a 2/6

FAMILY : SGV45M23EU
MODEL NO: SGV45M23EU/90
Check Position No/Part No or Replacement No

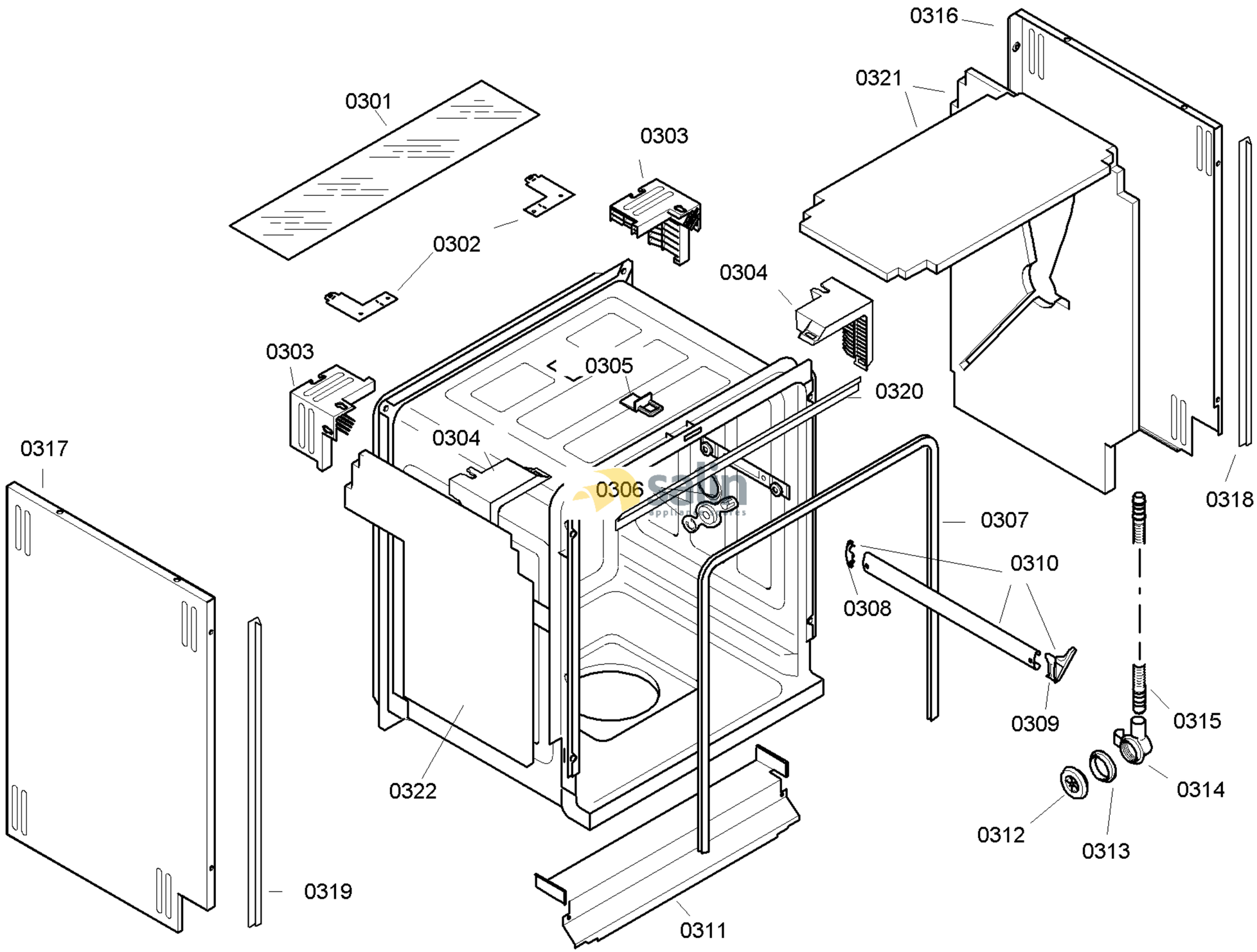

58300000130490 aet 000 a 3/6

FAMILY : SGV45M23EU
MODEL NO: SGV45M23EU/90
Check Position No/Part No or Replacement No

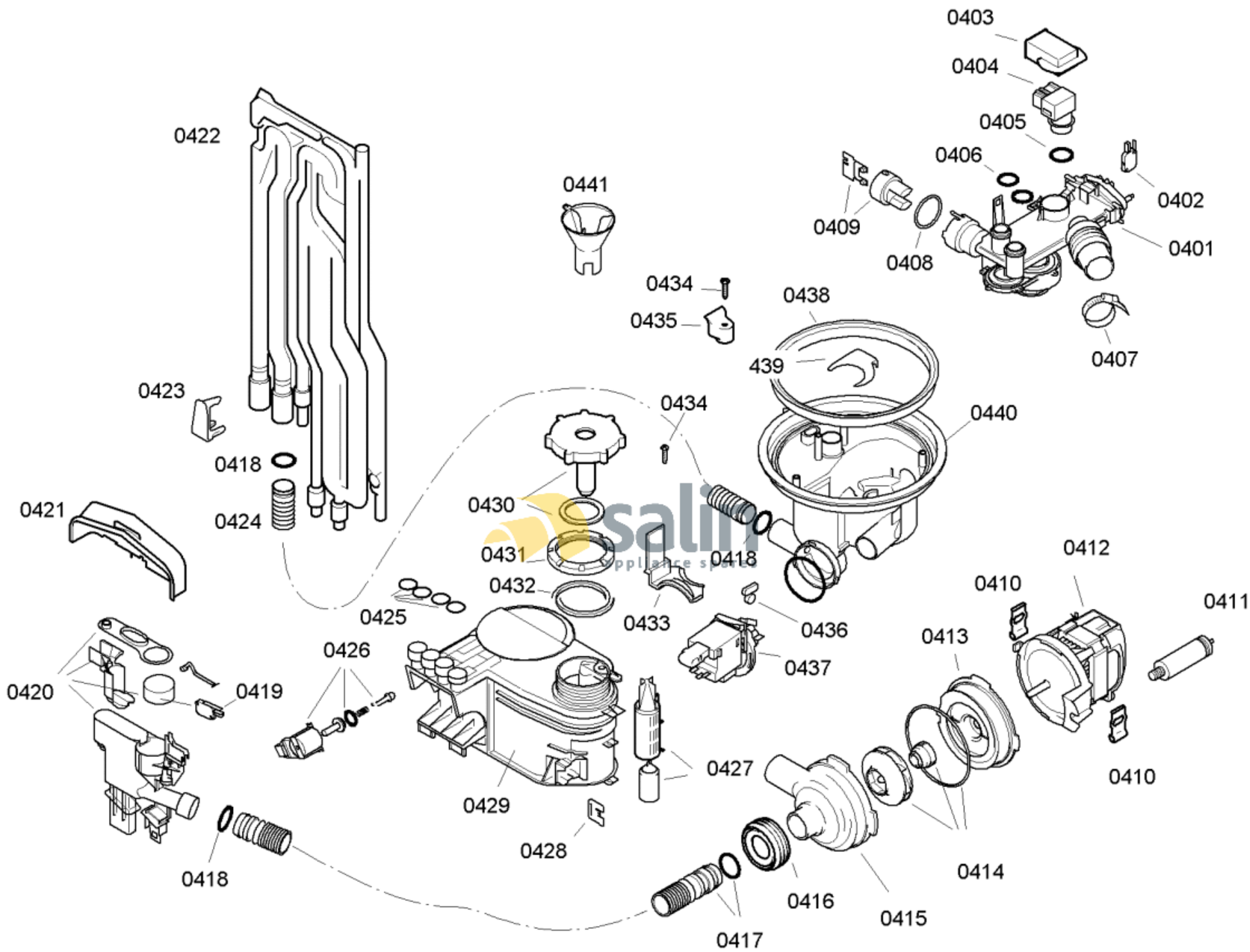

58300000130490 aet 000 a 4/6

FAMILY : SGV45M23EU

MODEL NO: SGV45M23EU/90

Check Position No/Part No or Replacement No

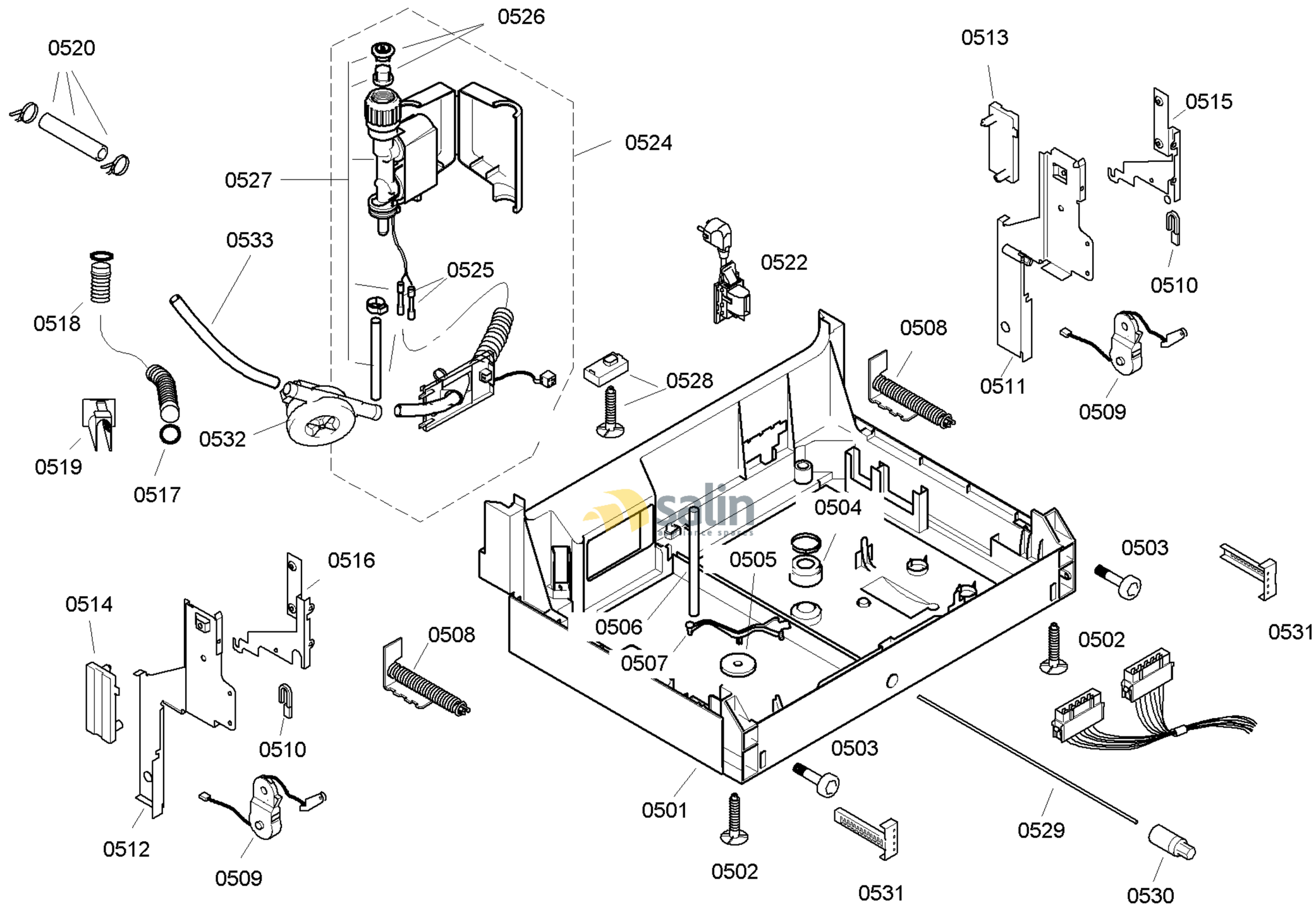

58300000130490 aet 000 a 5/6

FAMILY : SGV45M23EU
MODEL NO: SGV45M23EU/90
Check Position No/Part No or Replacement No

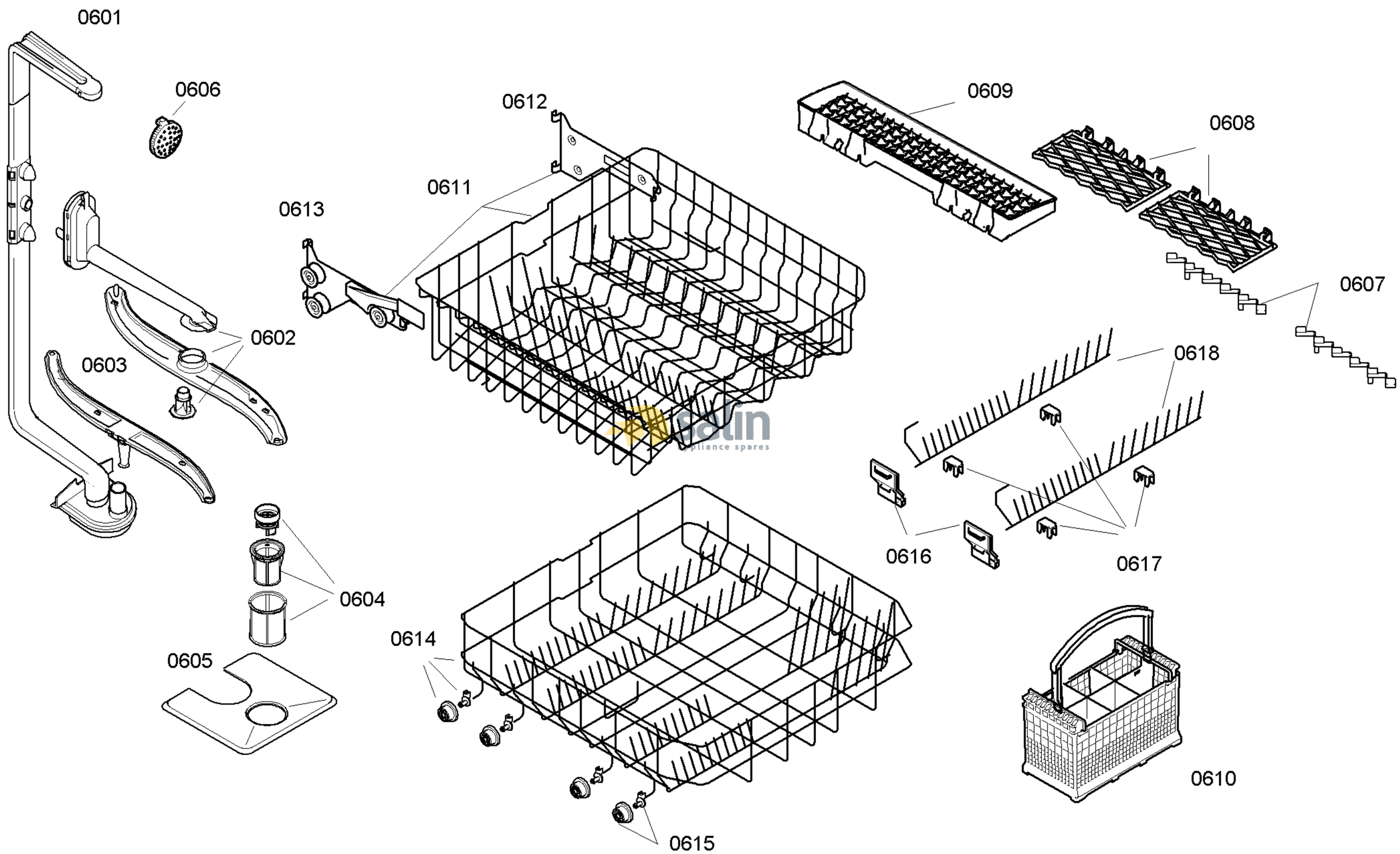

58300000130490 aet 000 a 6/6

FAMILY : SGV45M23EU
MODEL NO: SGV45M23EU/90
Check Position No/Part No or Replacement No