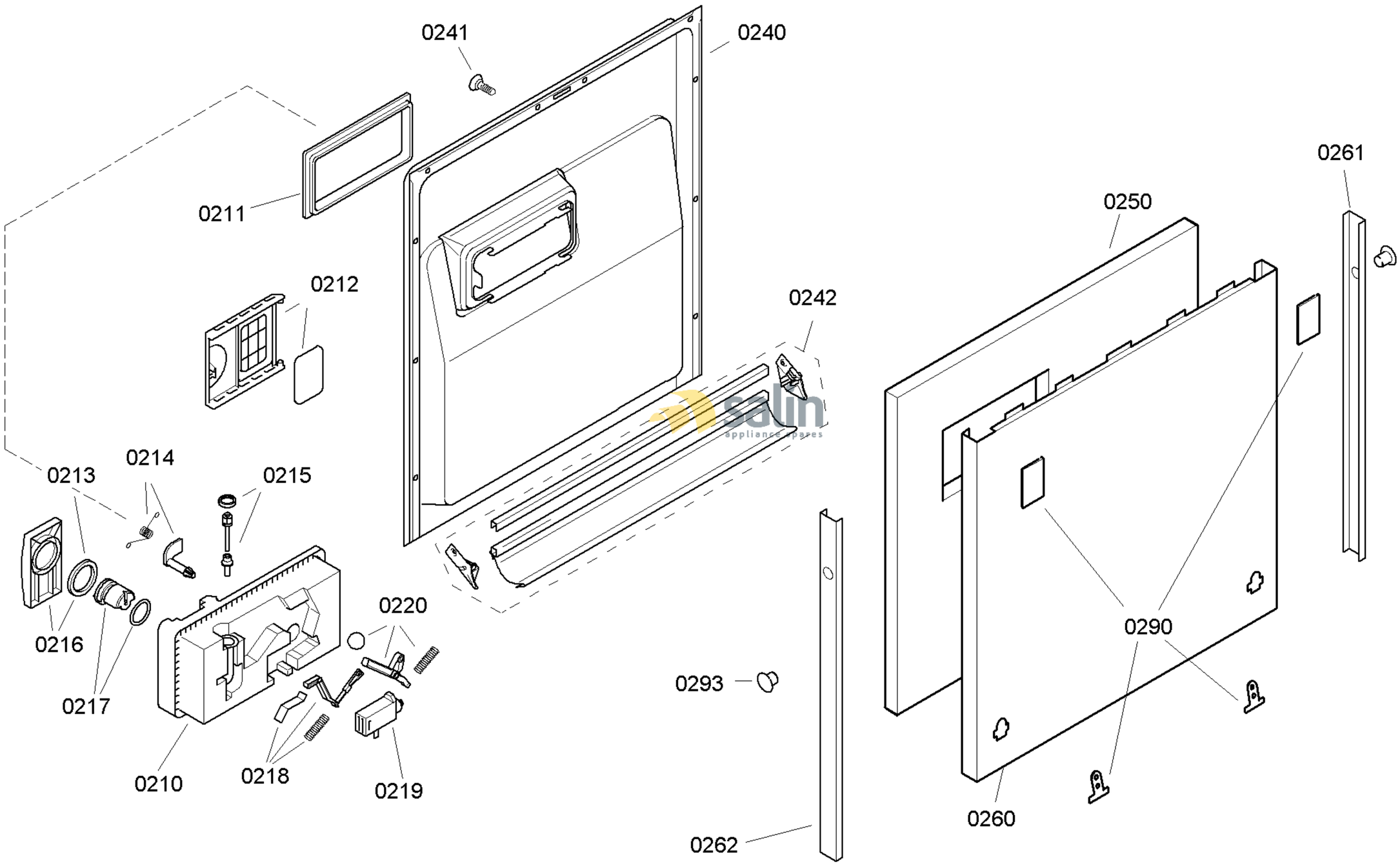

58300000120829 aet 000 a 2/6

FAMILY : SHI58M02CH
MODEL NO: SHI58M02CH/47
Check Position No/Part No or Replacement No

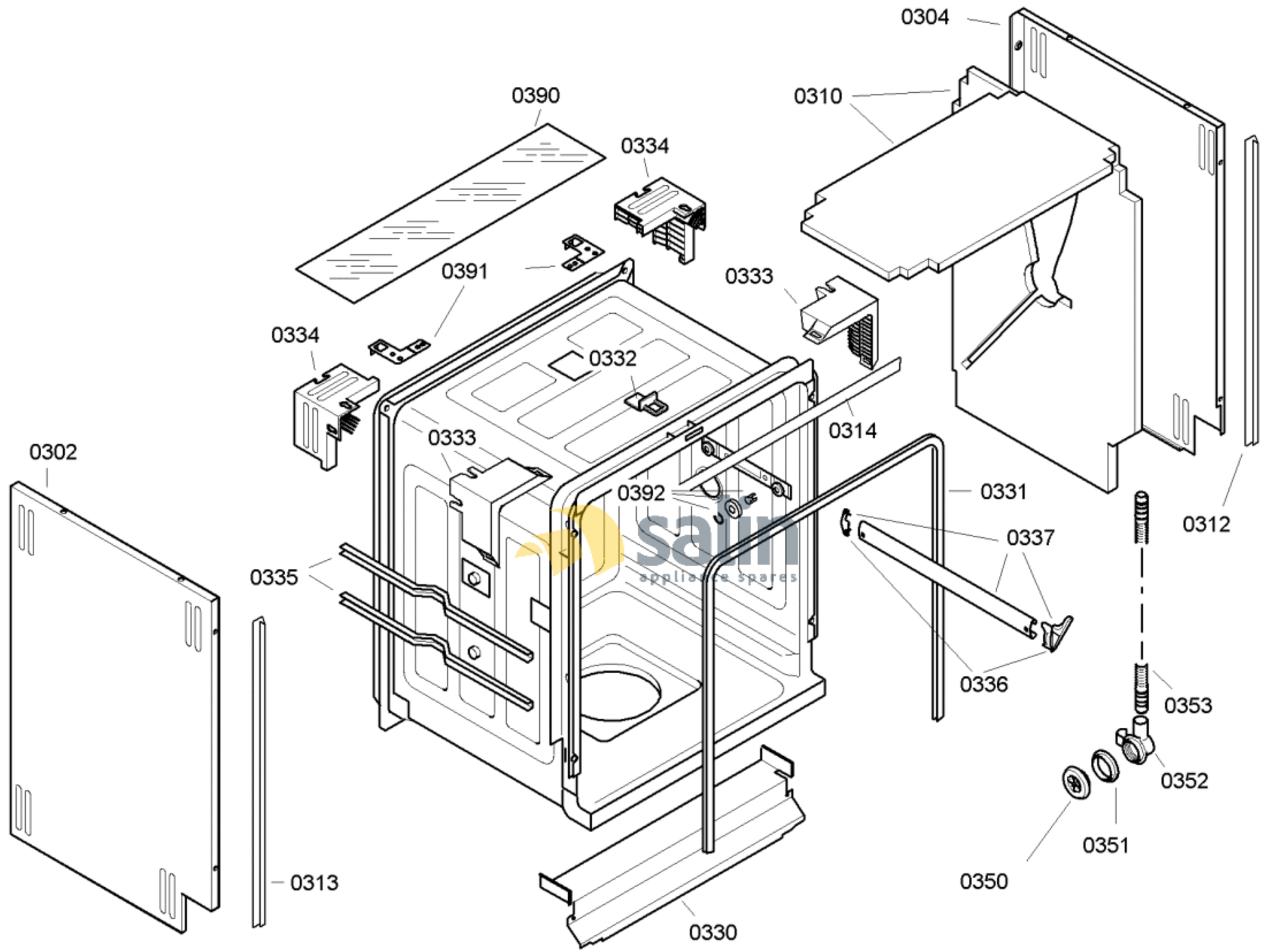

58300000120829 aet 000 a 3/6

FAMILY : SHI58M02CH

MODEL NO: SHI58M02CH/47

Check Position No/Part No or Replacement No

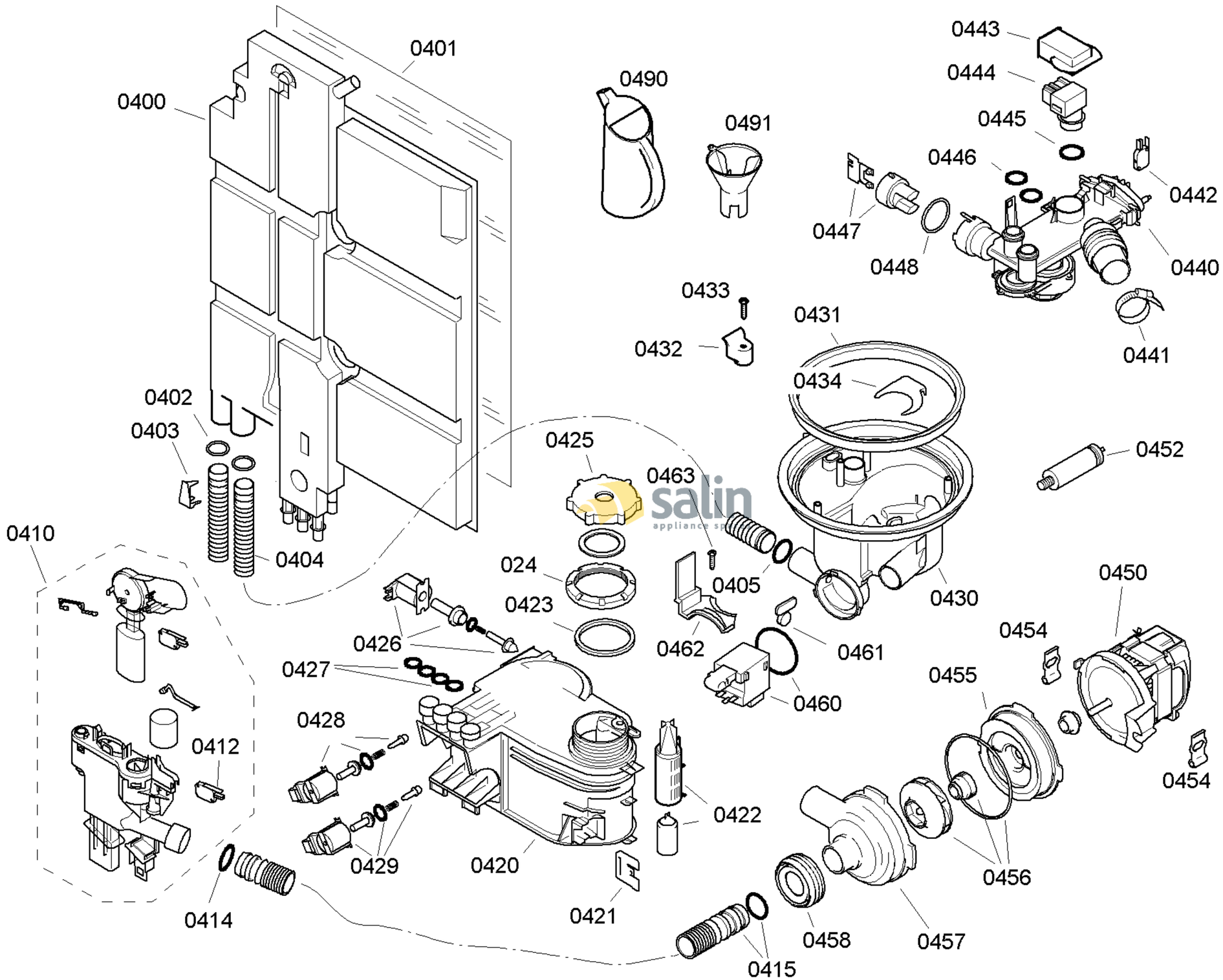

58300000120829 aet 000 a 4/6

FAMILY : SHI58M02CH
MODEL NO: SHI58M02CH/47
Check Position No/Part No or Replacement No

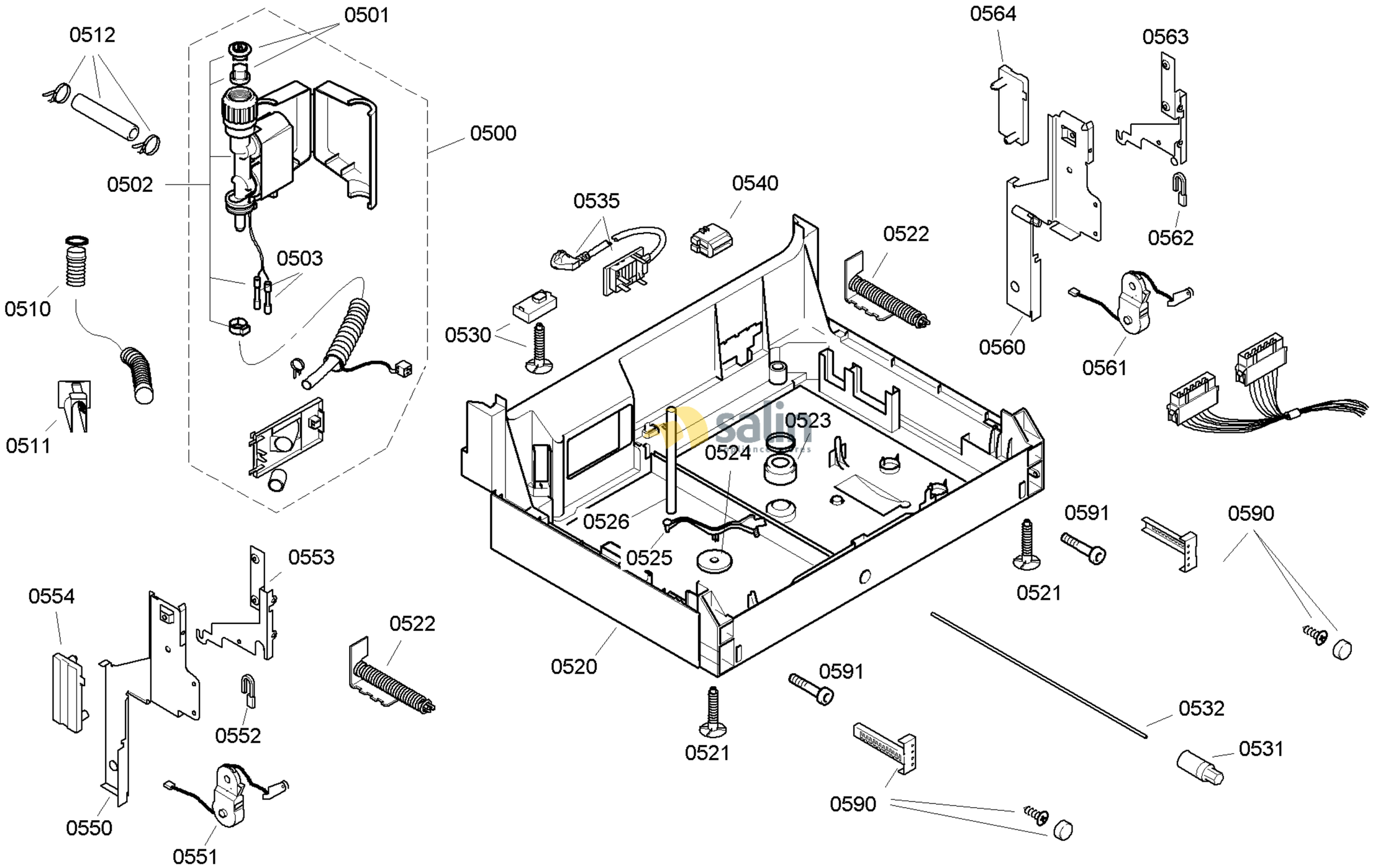

58300000120829 aet 000 a 5/6

FAMILY : SHI58M02CH
MODEL NO: SHI58M02CH/47
Check Position No/Part No or Replacement No

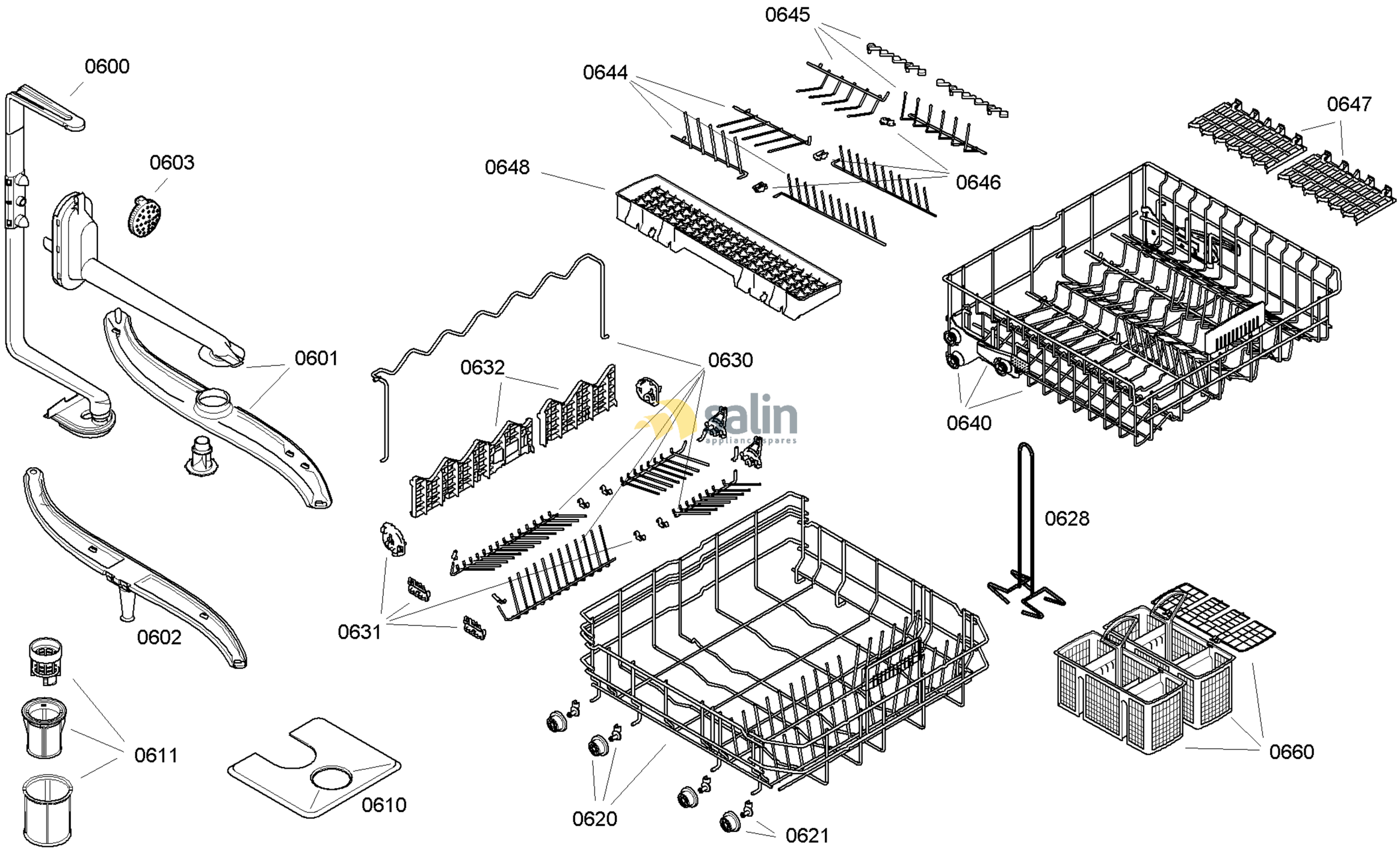

58300000120829 aet 000 a 6/6

FAMILY : SHI58M02CH
MODEL NO: SHI58M02CH/47
Check Position No/Part No or Replacement No