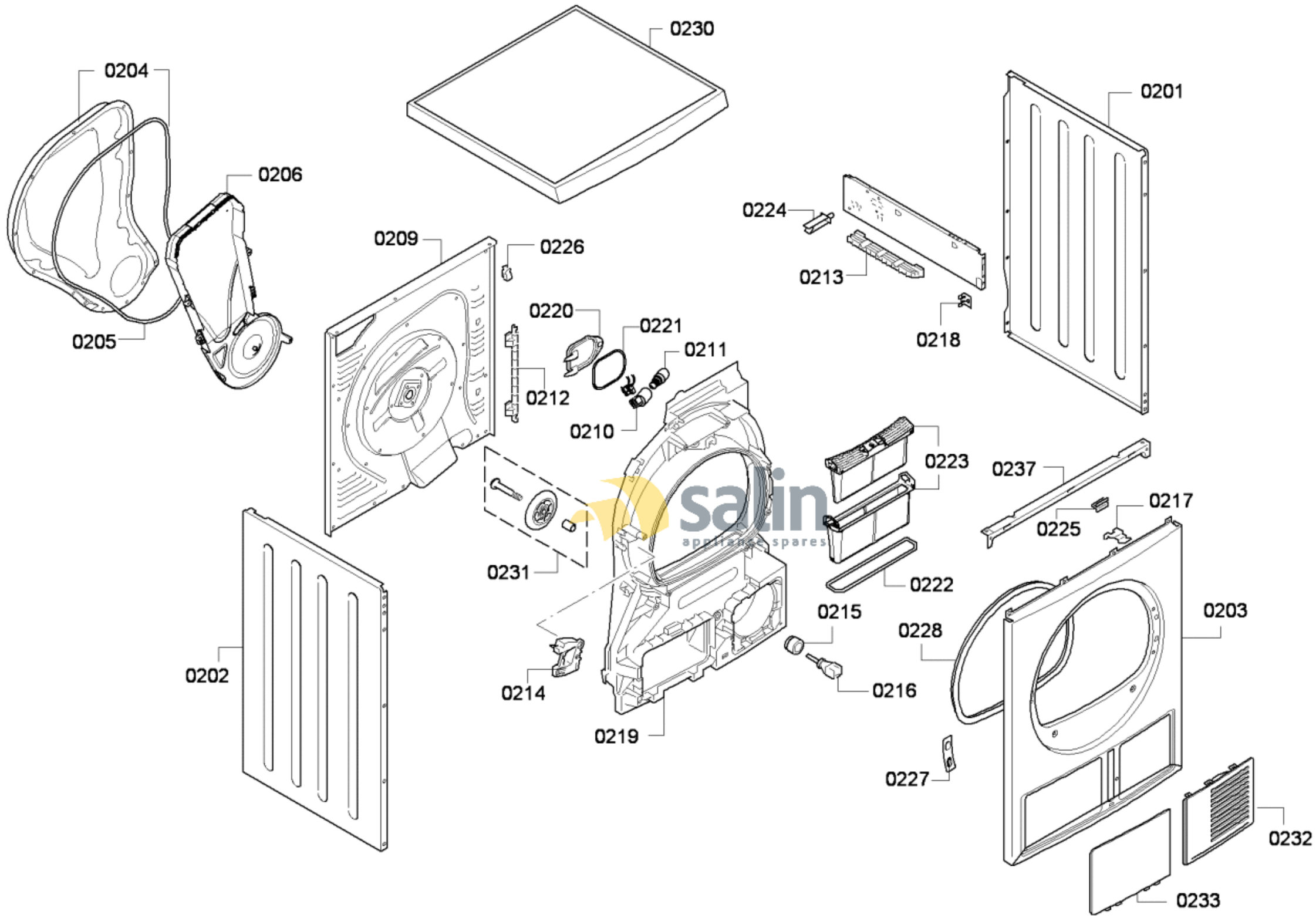

58300000145953 aet 000 a 2/5

FAMILY : WTW865C1NL

MODEL NO: WTW865C1NL/02

Check Position No/Part No or Replacement No

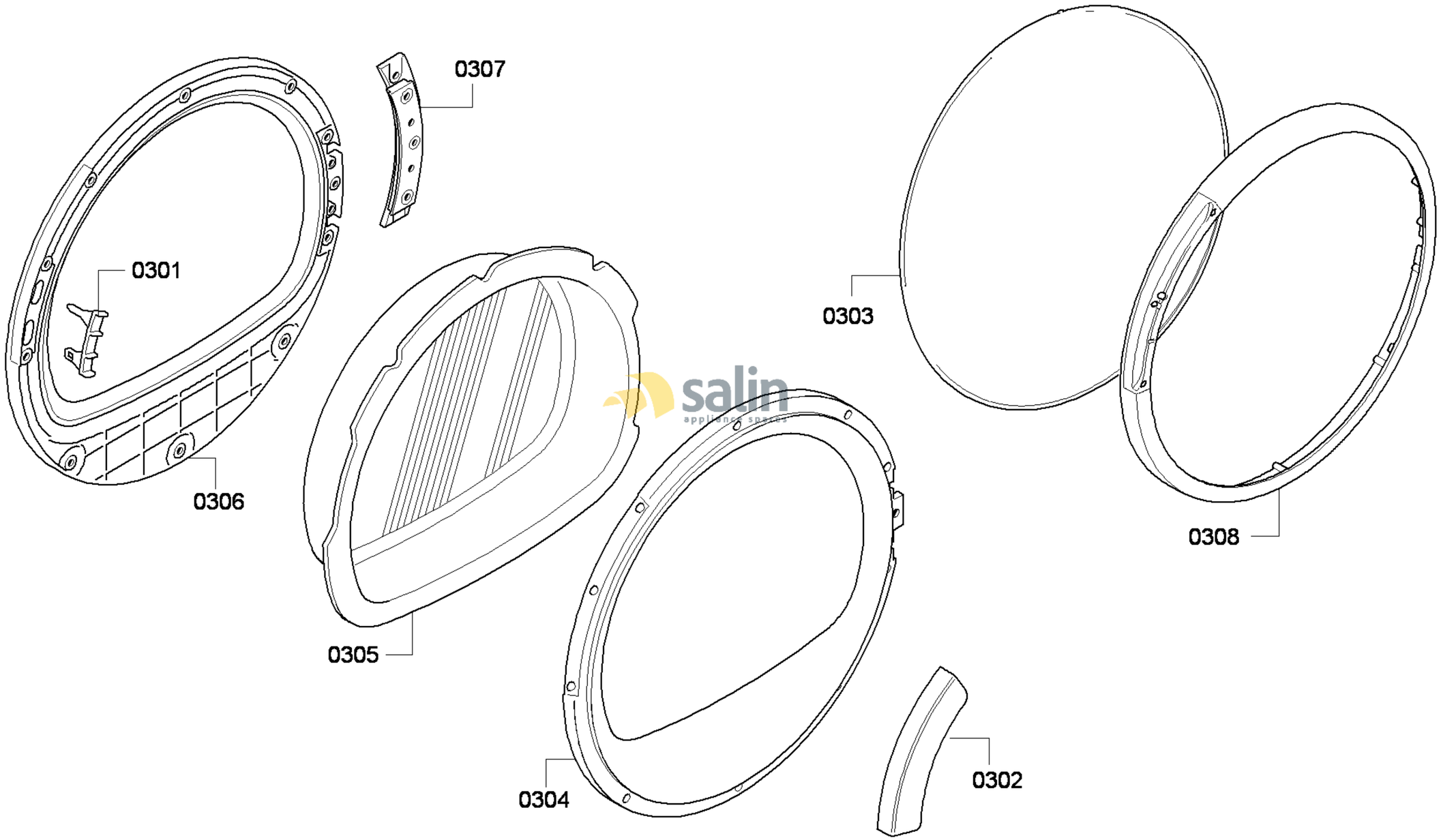

58300000145953 aet 000 a 3/5

FAMILY : WTW865C1NL
MODEL NO: WTW865C1NL/02
Check Position No/Part No or Replacement No

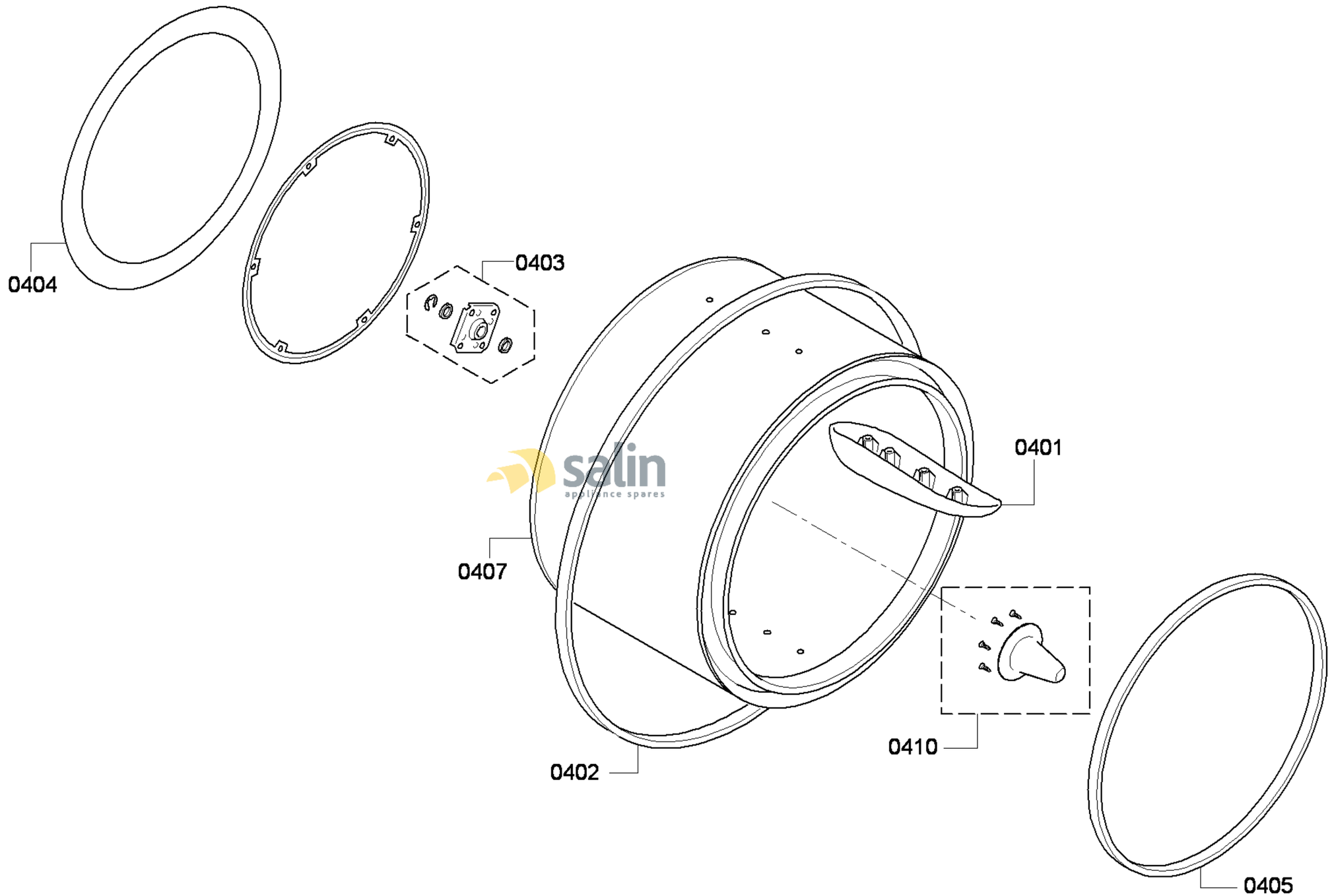

58300000145953 aet 000 a 4/5

FAMILY : WTW865C1NL
MODEL NO: WTW865C1NL/02
Check Position No/Part No or Replacement No

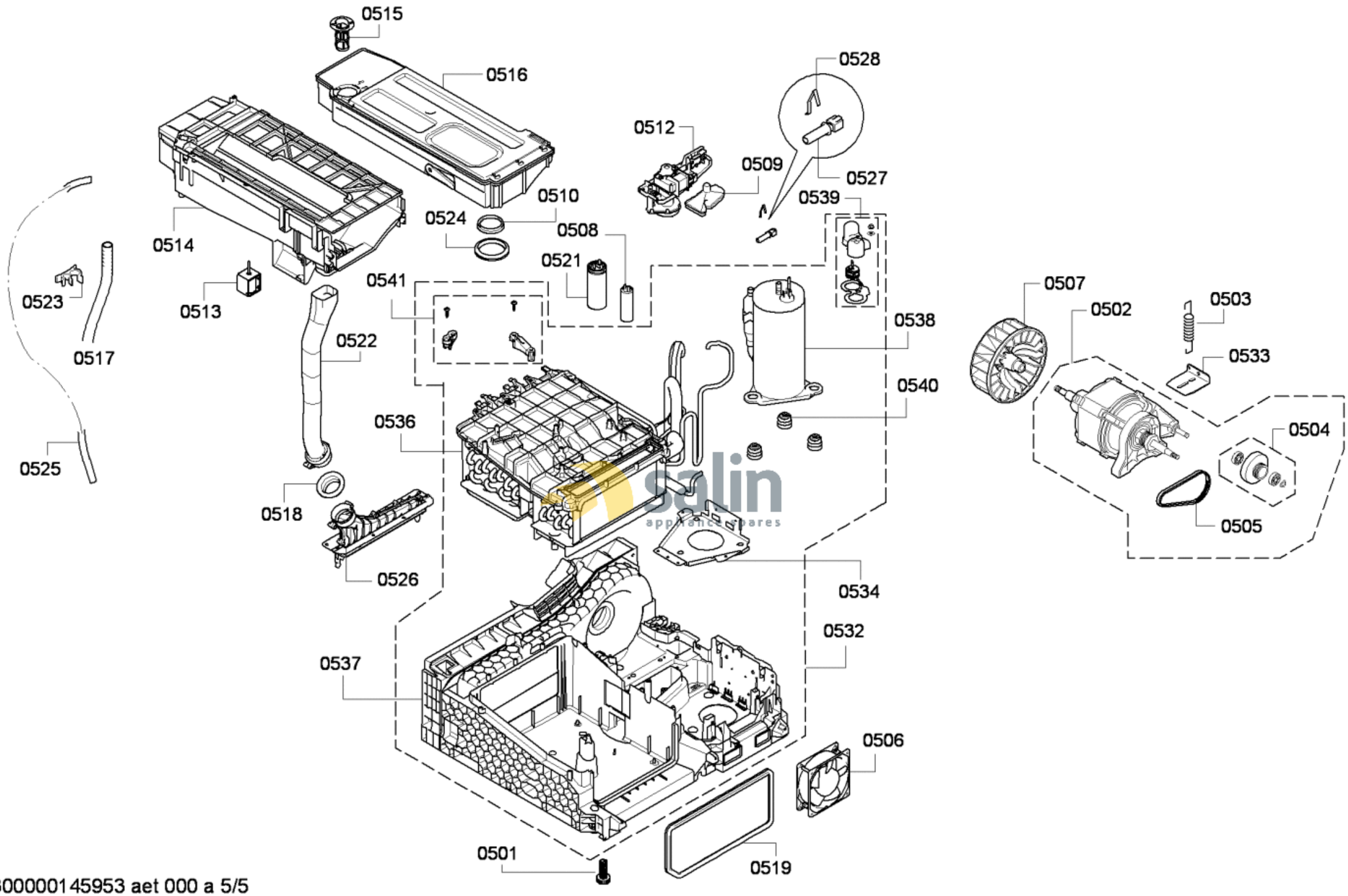

58300000145953 aet 000 a 5/5

FAMILY : WTW865C1NL

MODEL NO: WTW865C1NL/02

Check Position No/Part No or Replacement No