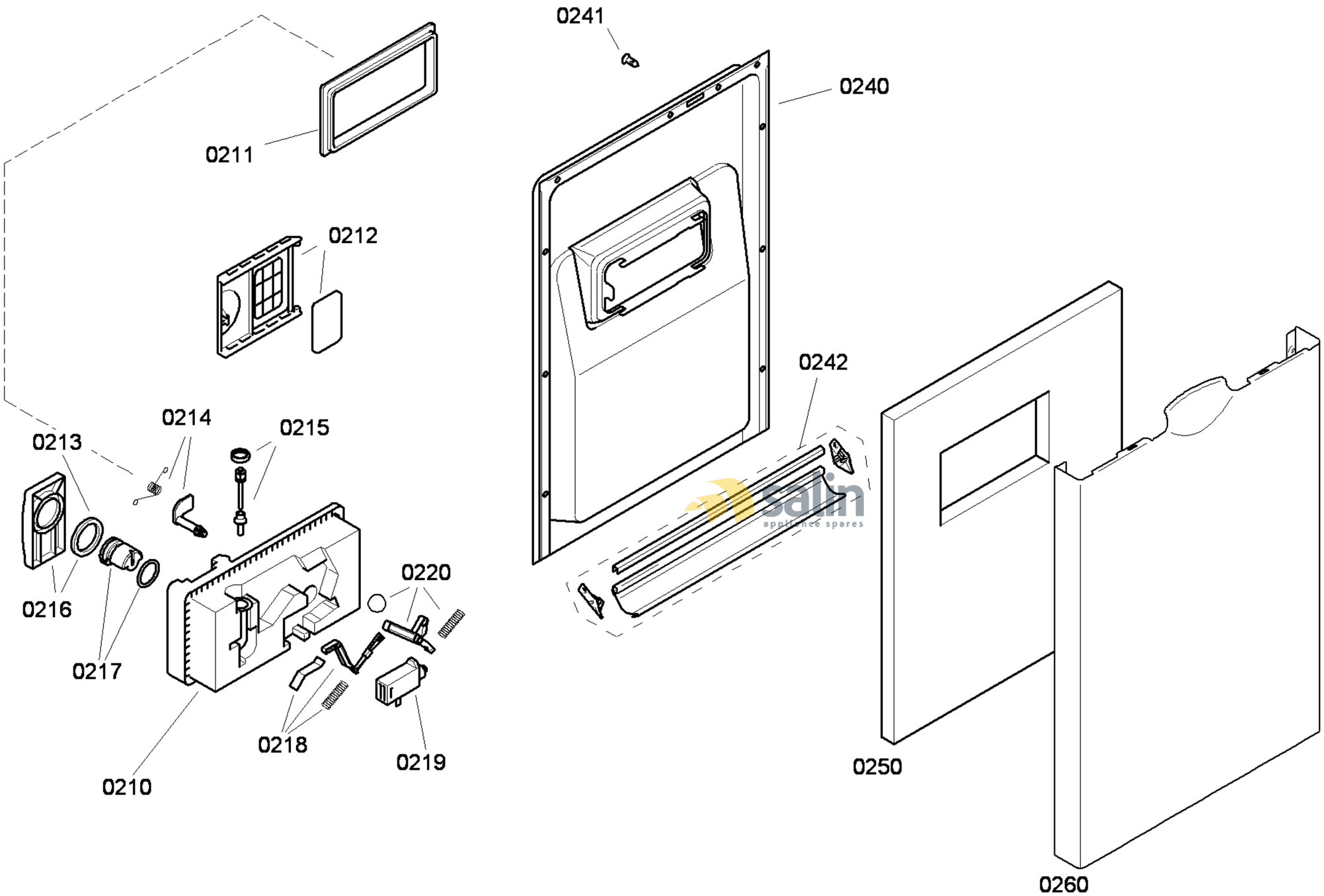

58300000145231 aet 000 a 2/6

FAMILY : SRS55M72EU
MODEL NO: SRS55M72EU/01
Check Position No/Part No or Replacement No

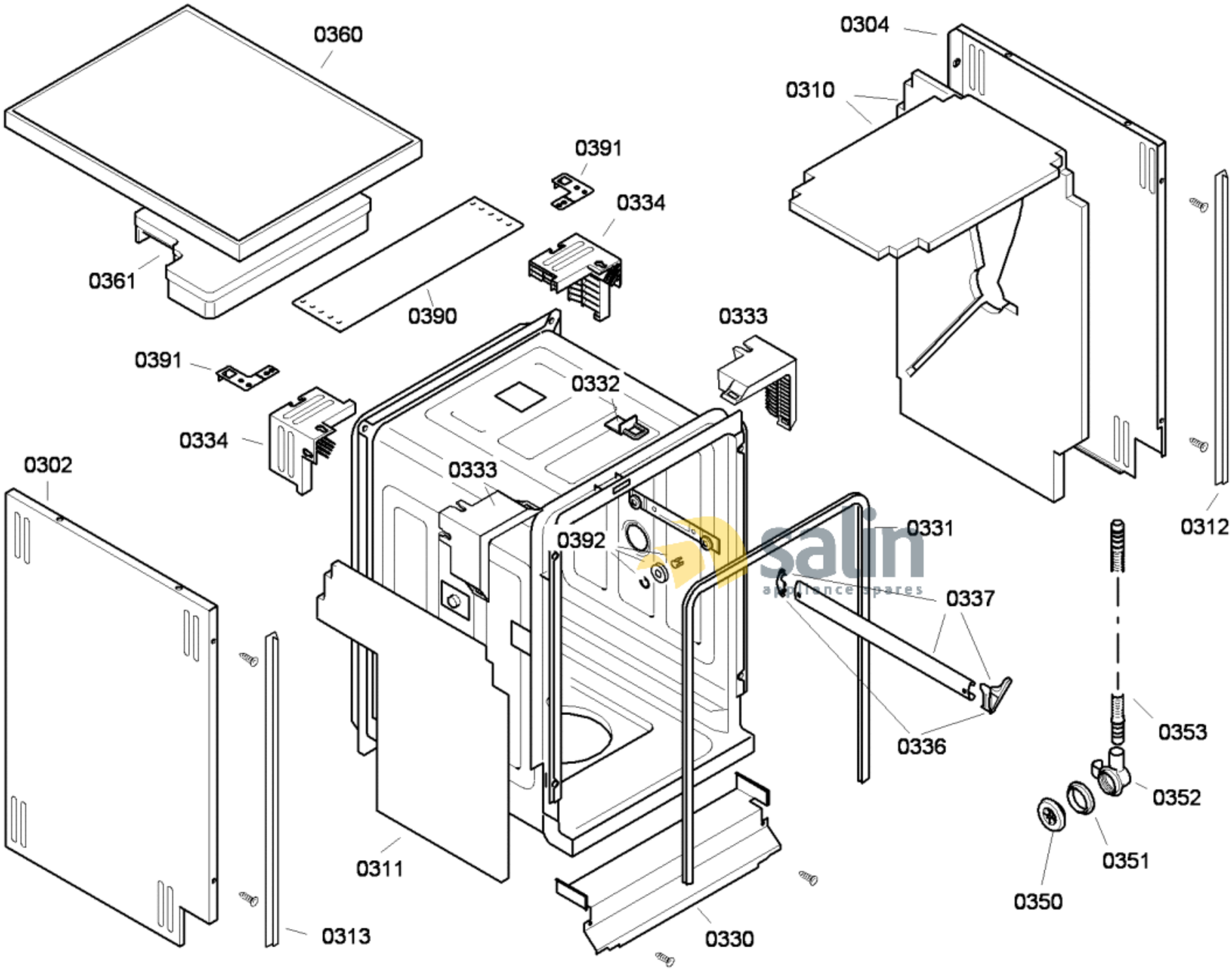

58300000145231 aet 000 a 3/6

FAMILY : SRS55M72EU

MODEL NO: SRS55M72EU/01

Check Position No/Part No or Replacement No

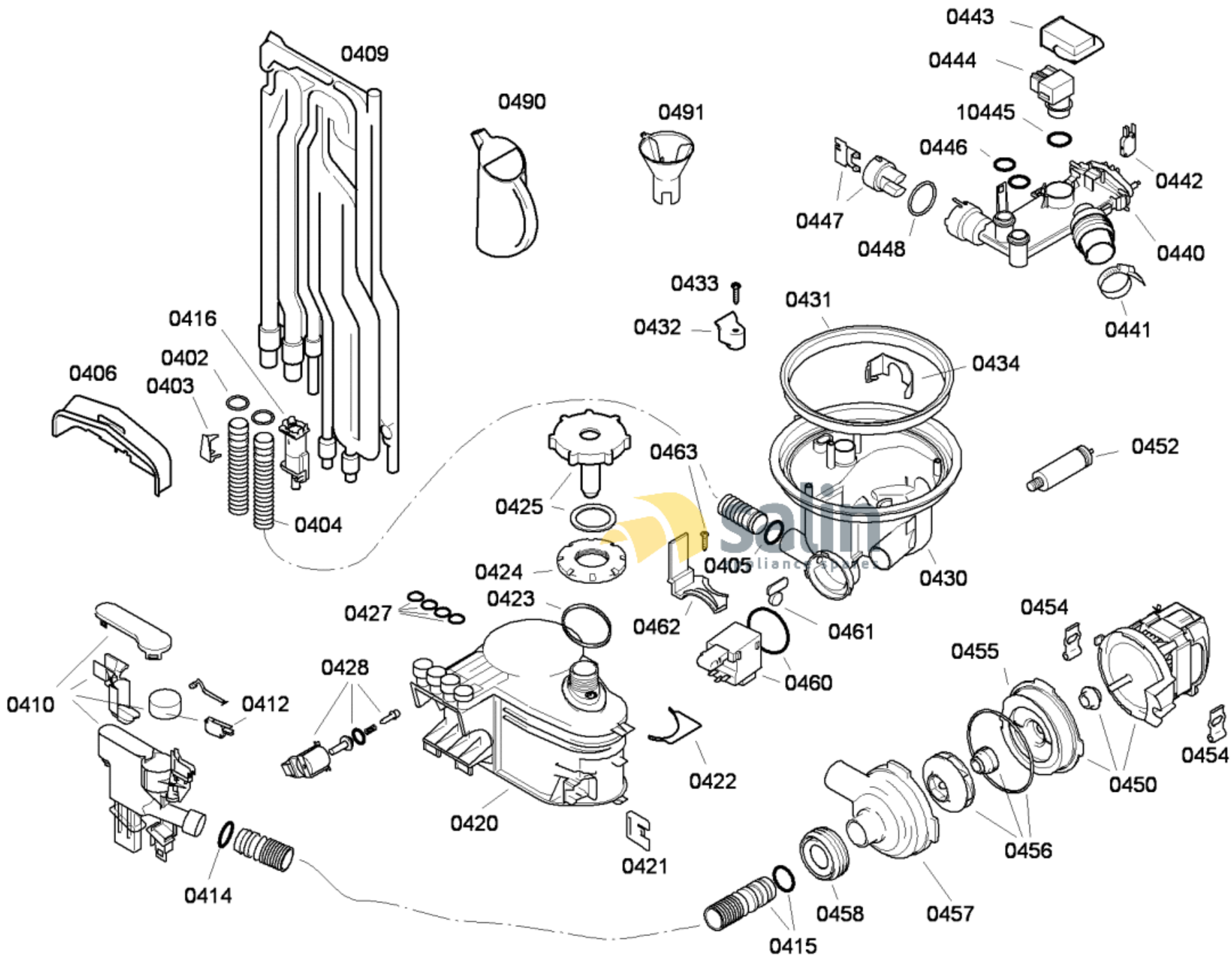

58300000145231 aet 000 a 4/6

FAMILY : SRS55M72EU

MODEL NO: SRS55M72EU/01

Check Position No/Part No or Replacement No

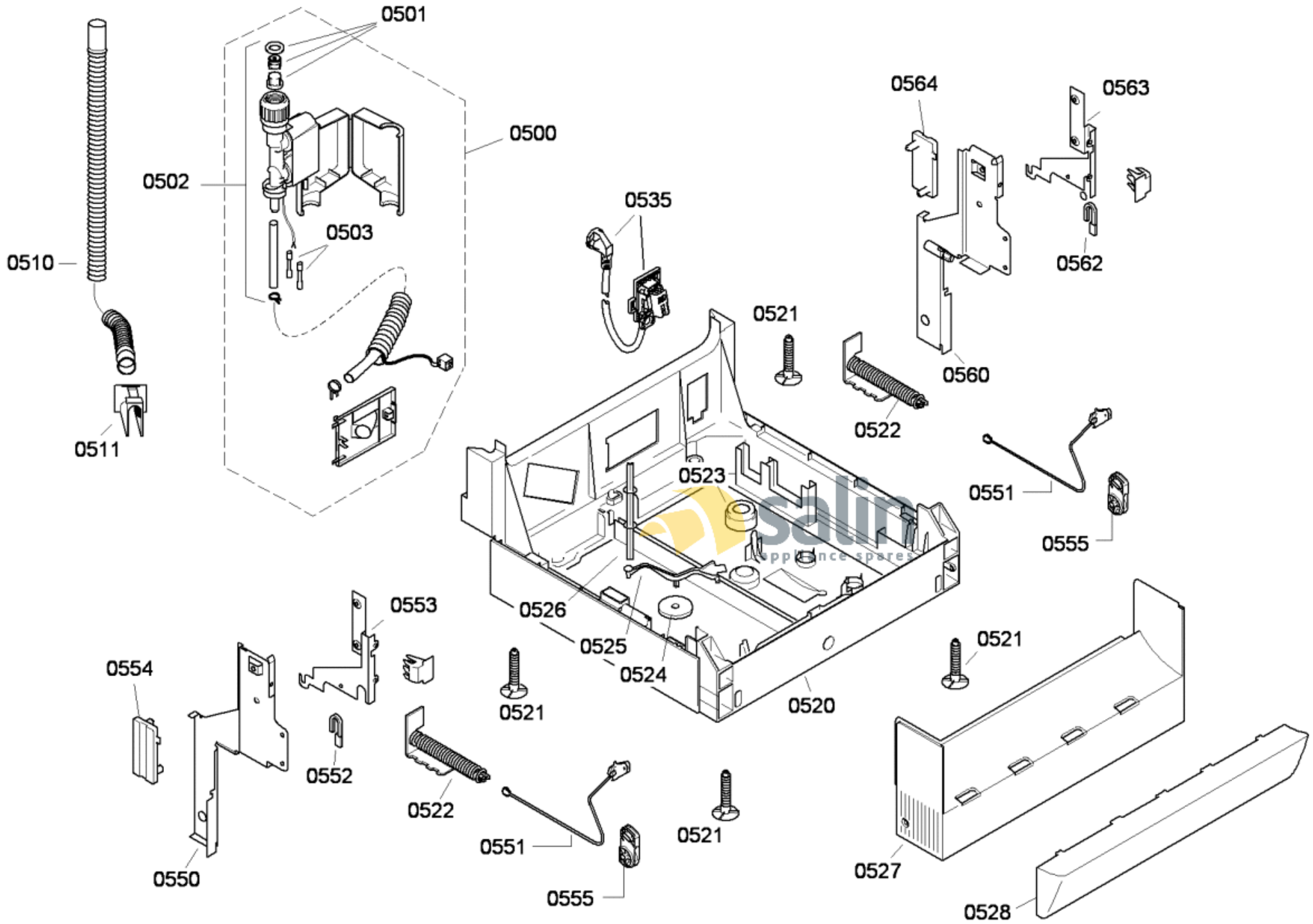

58300000145231 aet 000 a 5/6

FAMILY : SRS55M72EU

MODEL NO: SRS55M72EU/01

Check Position No/Part No or Replacement No

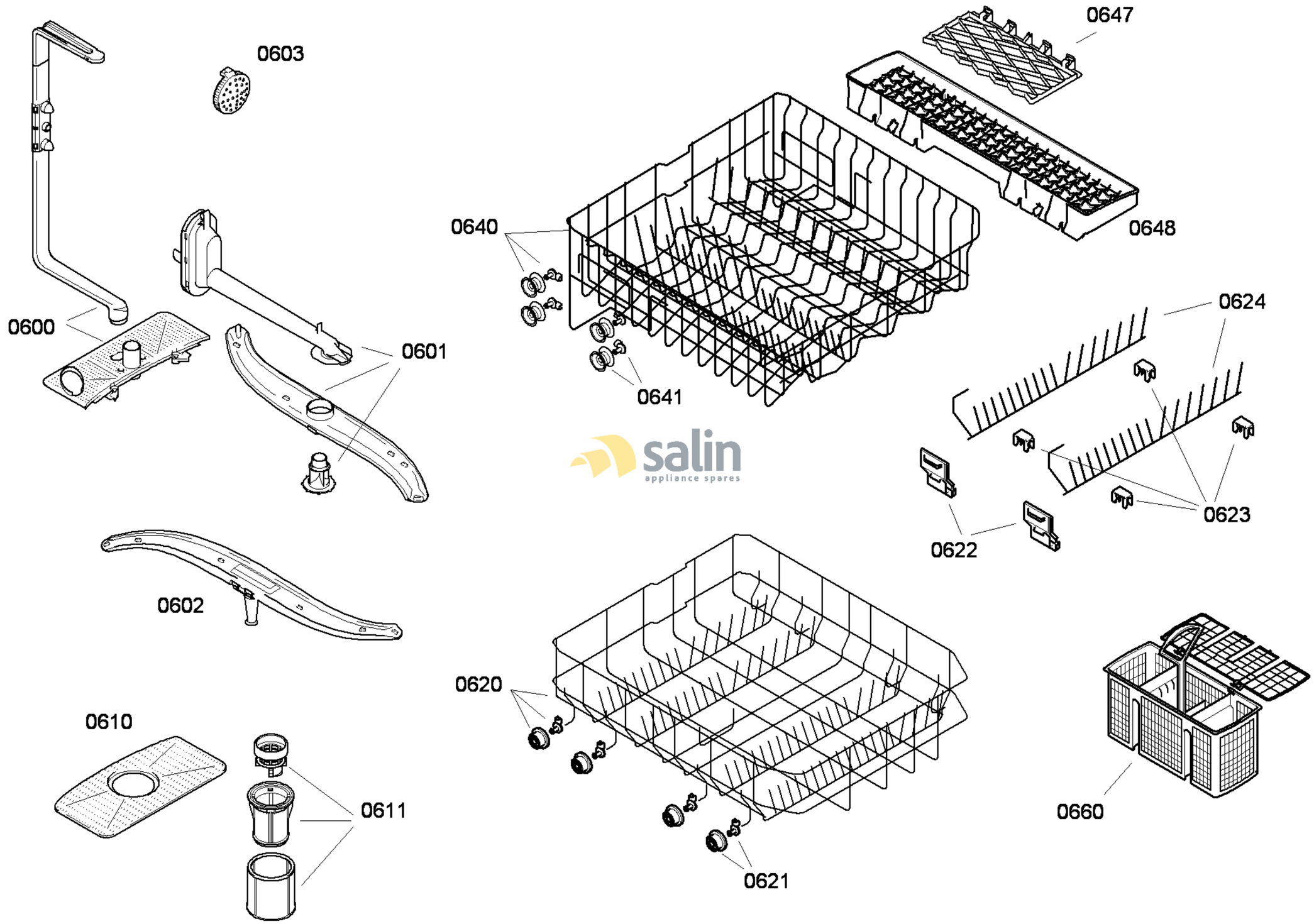

58300000145231 aet 000 a 6/6

FAMILY : SRS55M72EU
MODEL NO: SRS55M72EU/01
Check Position No/Part No or Replacement No