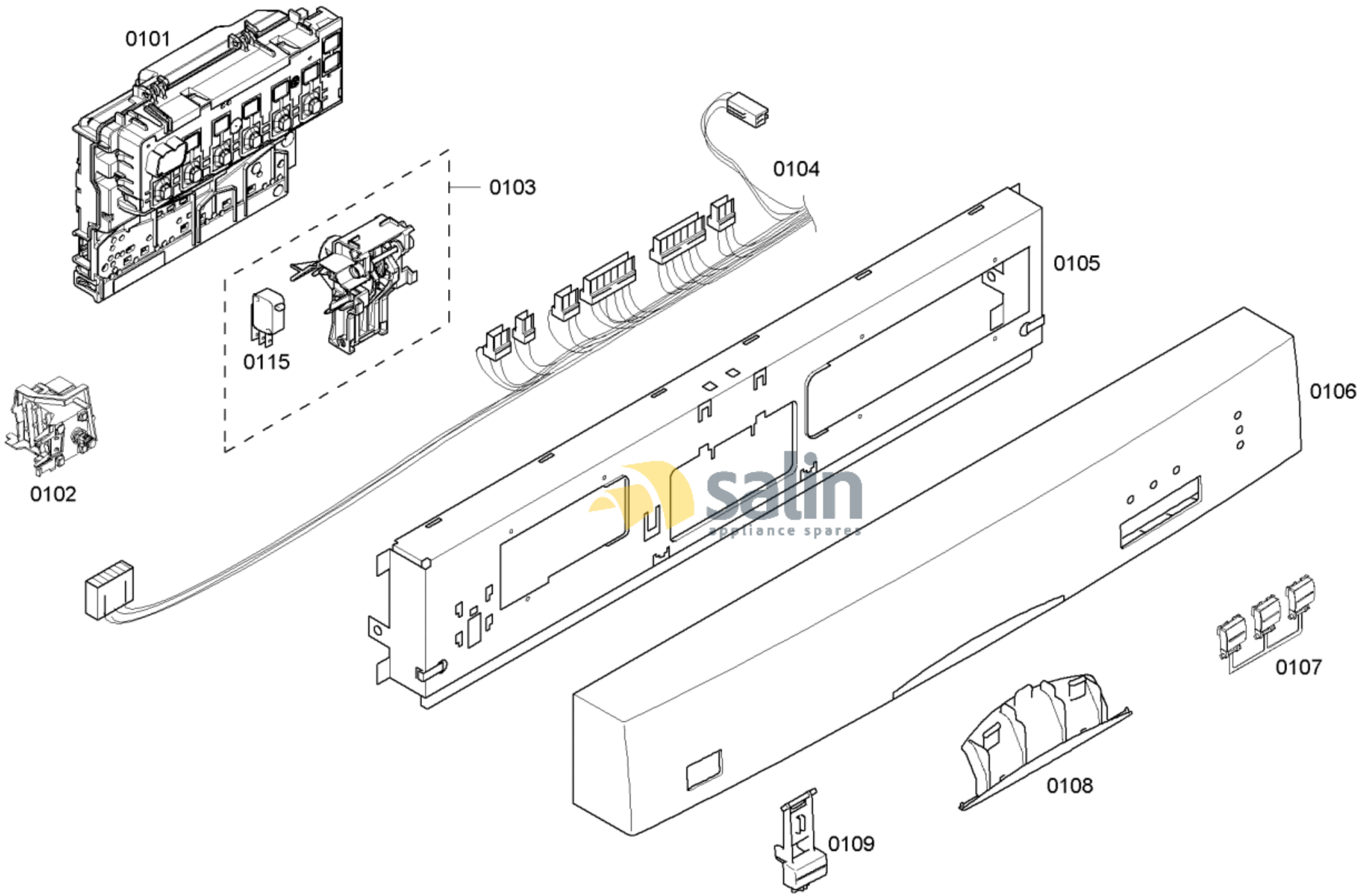

58300000125400 aet 000 b 1/6

FAMILY : SHE33M02UC

MODEL NO: SHE33M02UC/48

Check Position No/Part No or Replacement No

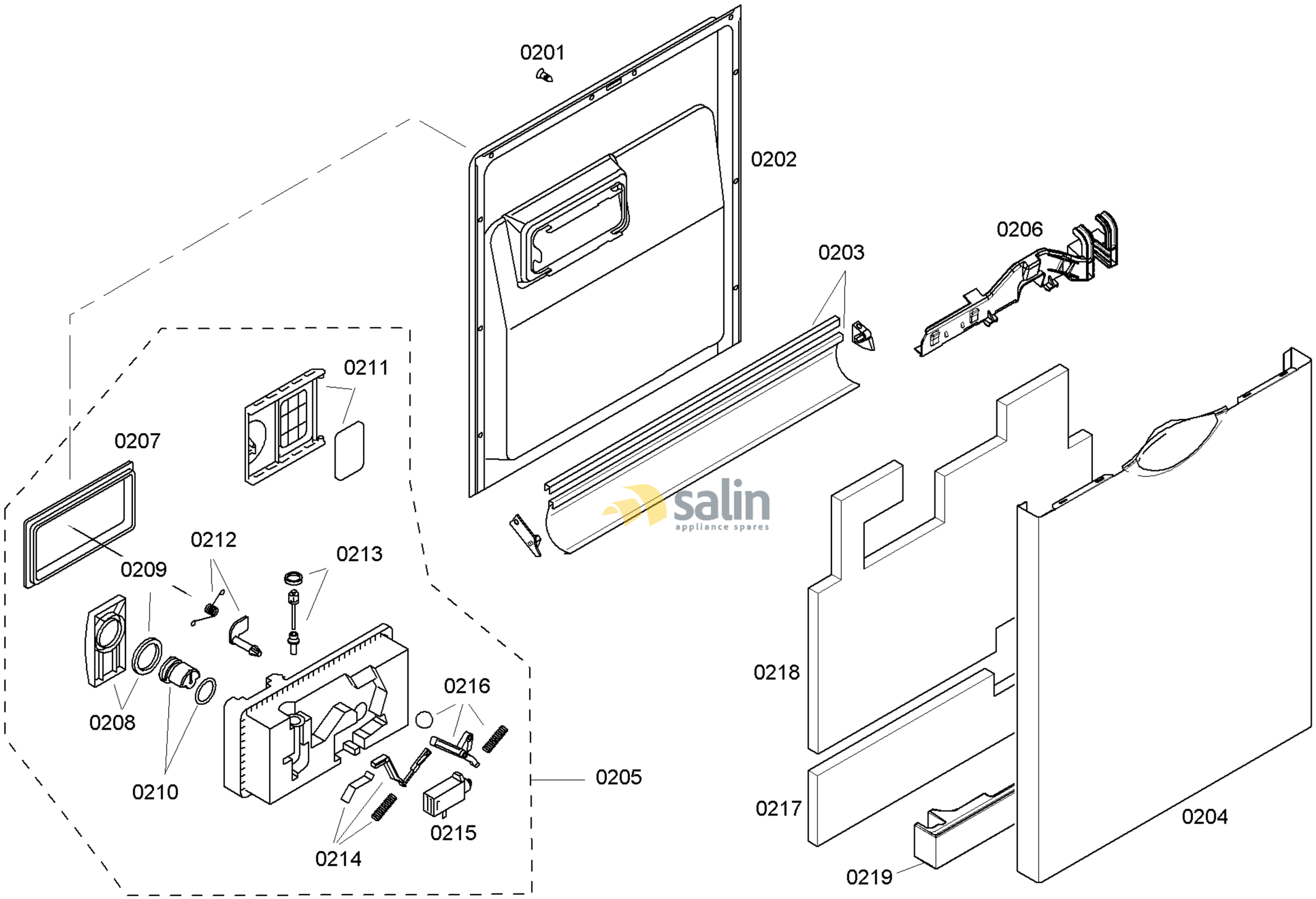

58300000125400 aet 000 b 2/6

FAMILY : SHE33M02UC
MODEL NO: SHE33M02UC/48
Check Position No/Part No or Replacement No

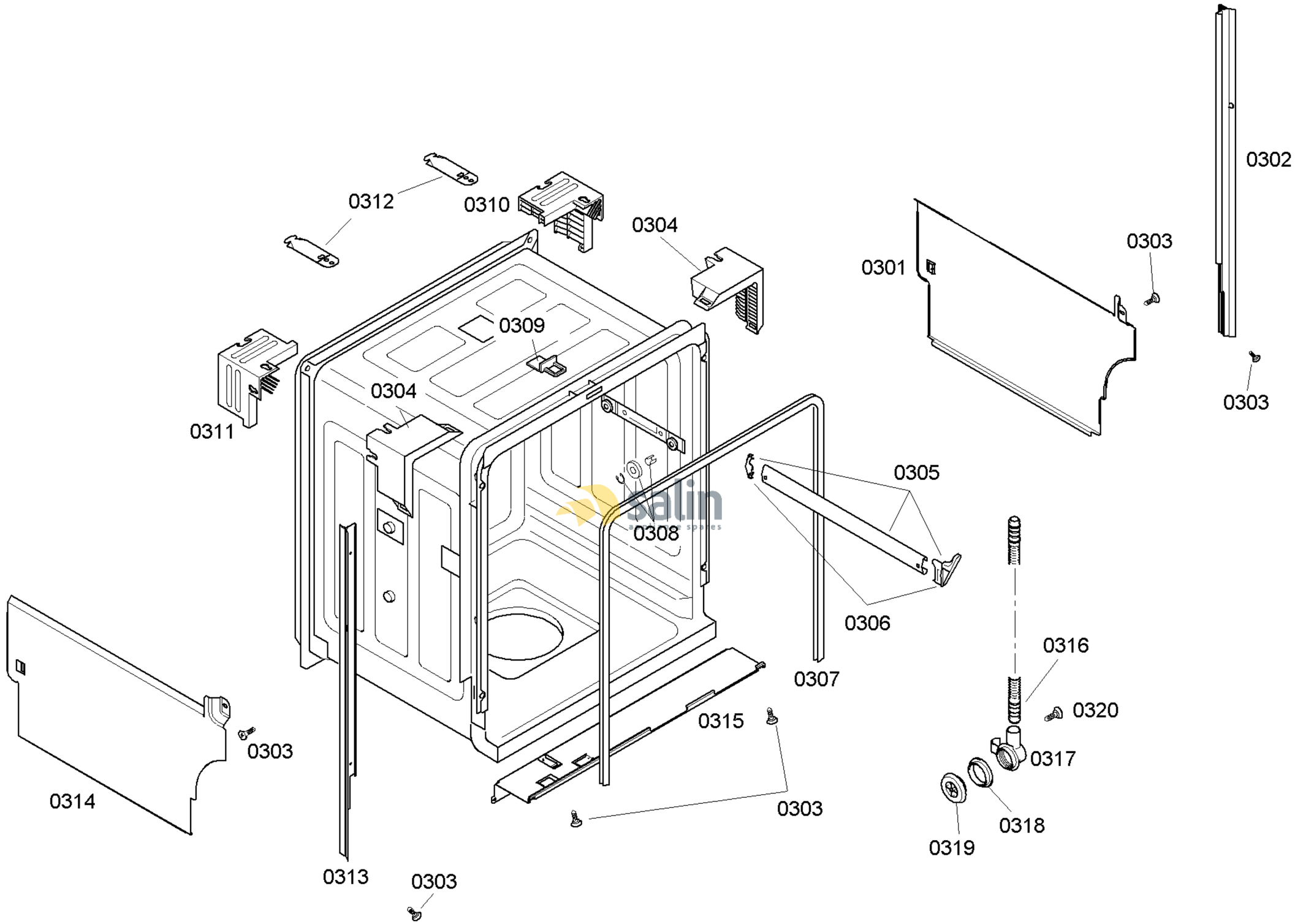

58300000125400 aet 000 b 3/6

FAMILY : SHE33M02UC
MODEL NO: SHE33M02UC/48
Check Position No/Part No or Replacement No

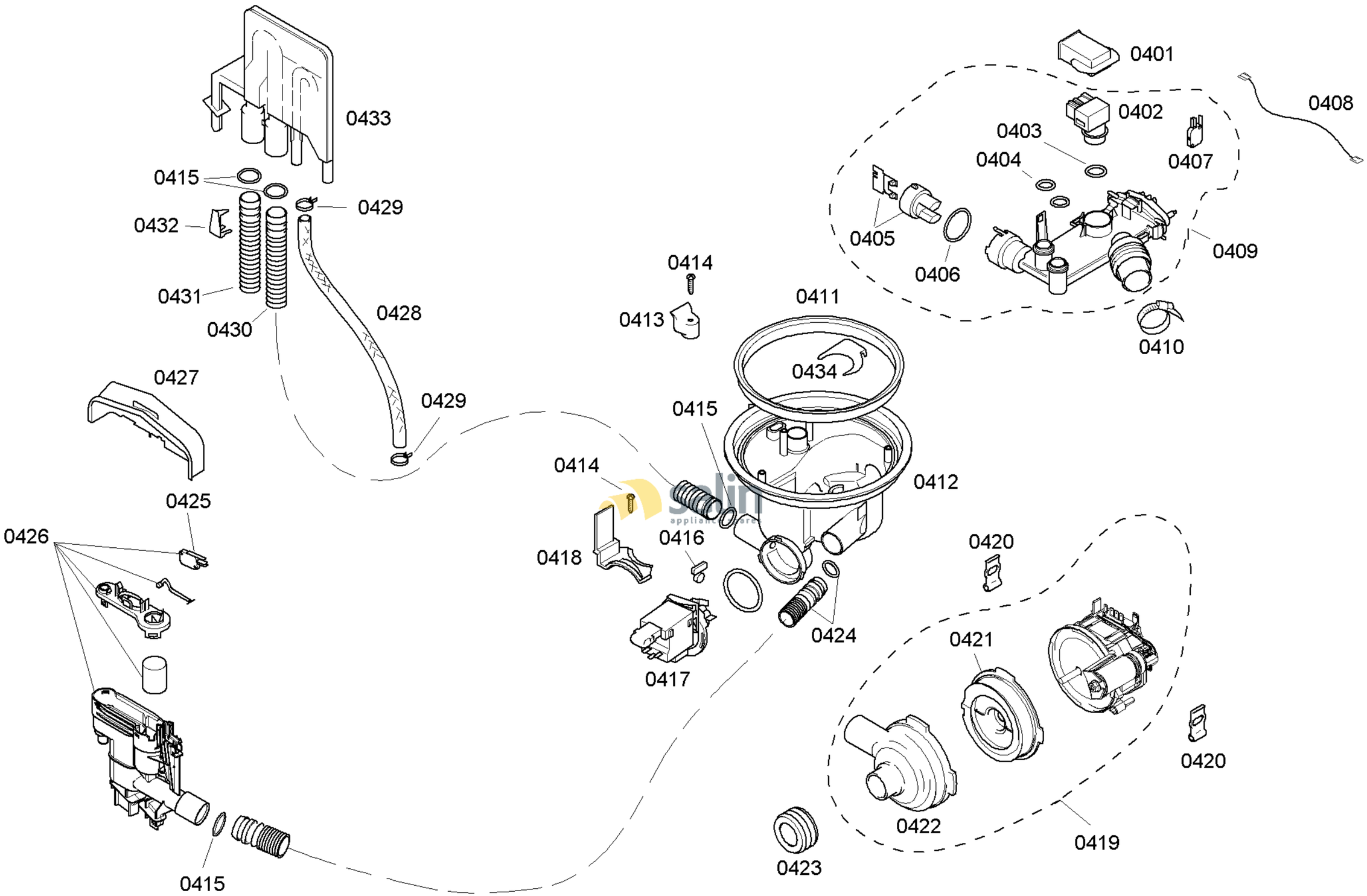

58300000125400 aet 000 b 4/6

FAMILY : SHE33M02UC
MODEL NO: SHE33M02UC/48
Check Position No/Part No or Replacement No

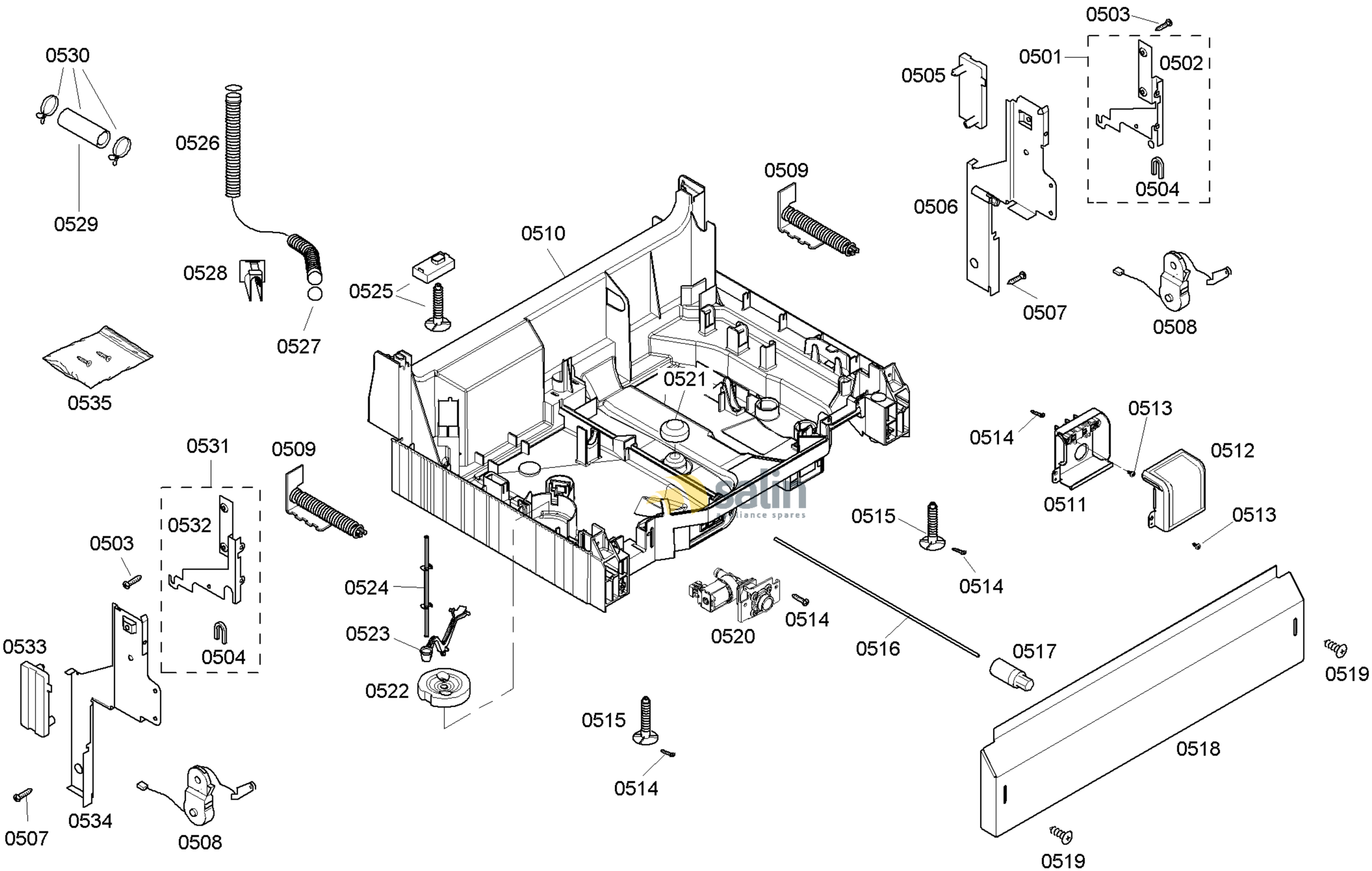

58300000125400 aet 000 b 5/6

FAMILY : SHE33M02UC
MODEL NO: SHE33M02UC/48
Check Position No/Part No or Replacement No

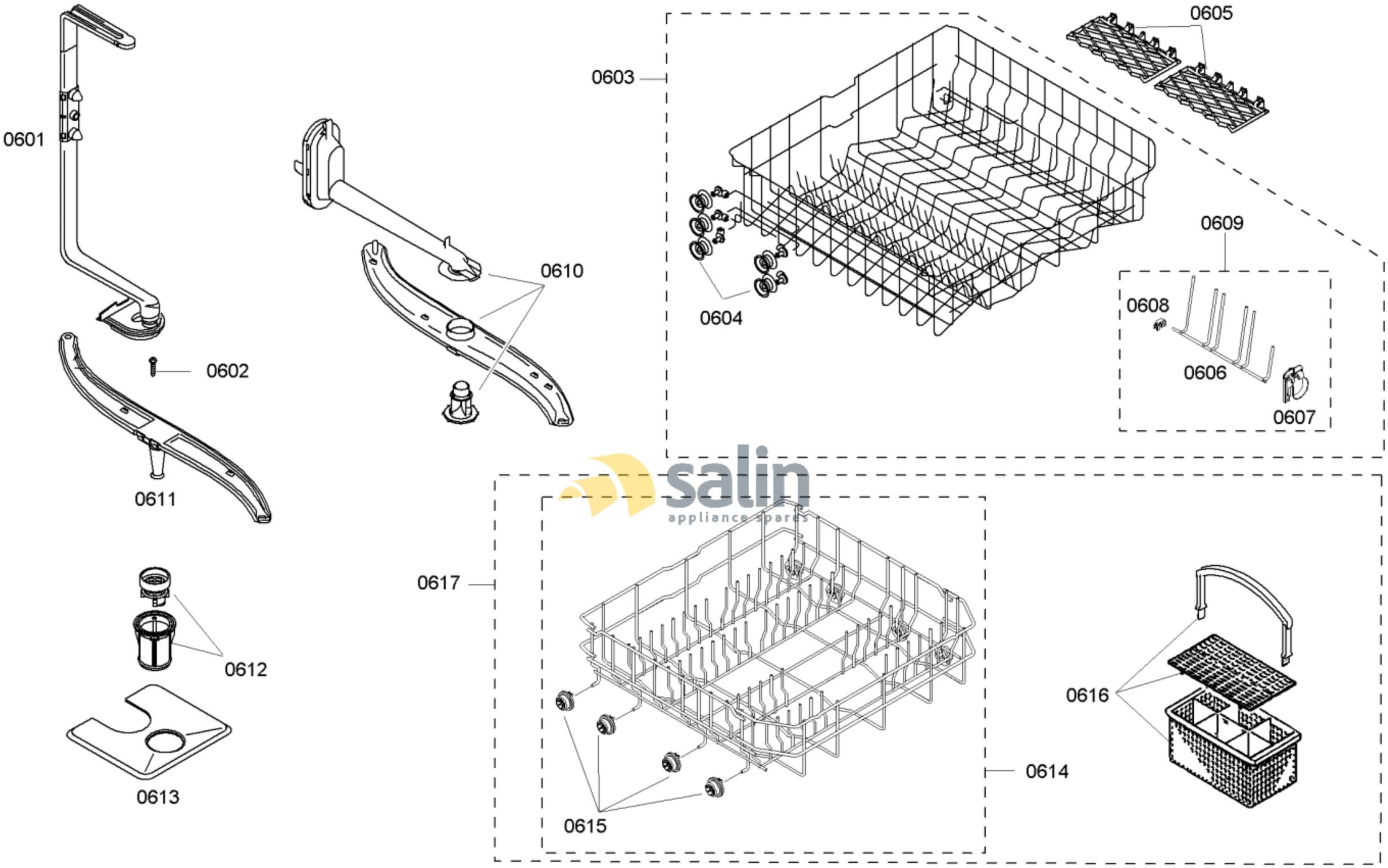

salin
appliance spares

58300000125400 aet 000 b 6/6

FAMILY : SHE33M02UC

MODEL NO: SHE33M02UC/48

Check Position No/Part No or Replacement No