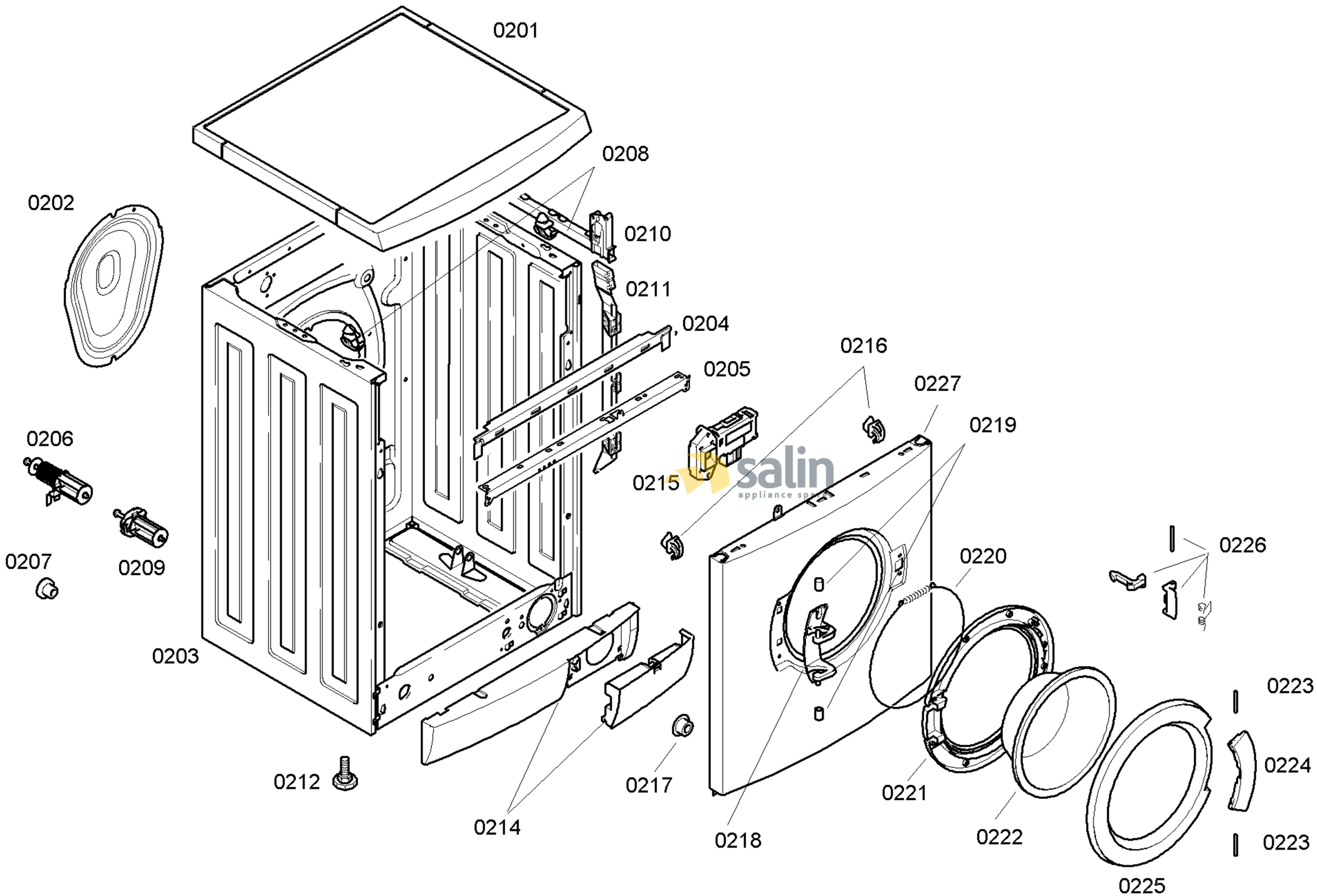

58300000123205 aet 000 a 2/4

FAMILY : WAE20161OE
MODEL NO: WAE20161OE/01
Check Position No/Part No or Replacement No

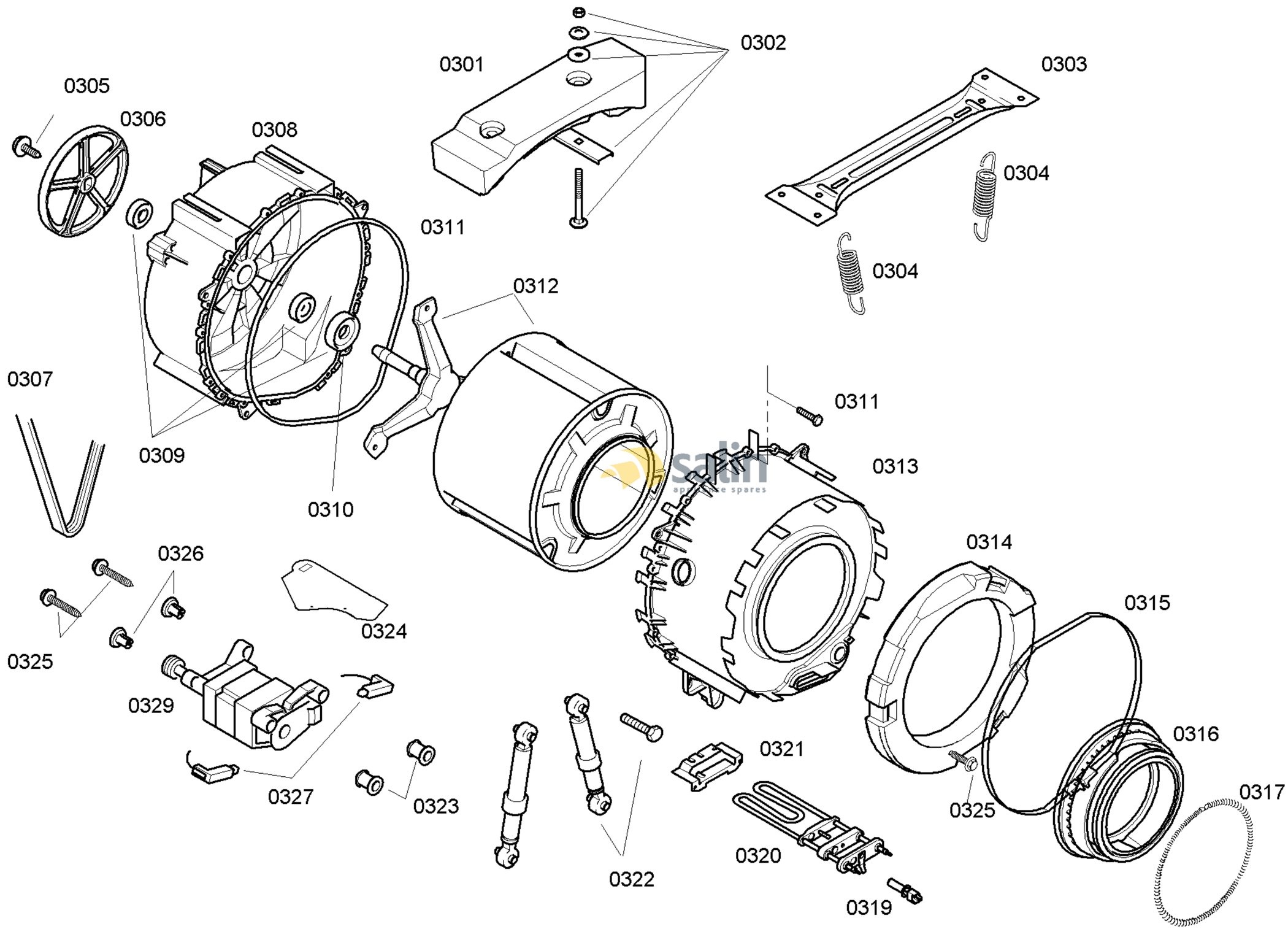

58300000123205 aet 000 a 3/4

FAMILY : WAE20161OE
MODEL NO: WAE20161OE/01
Check Position No/Part No or Replacement No

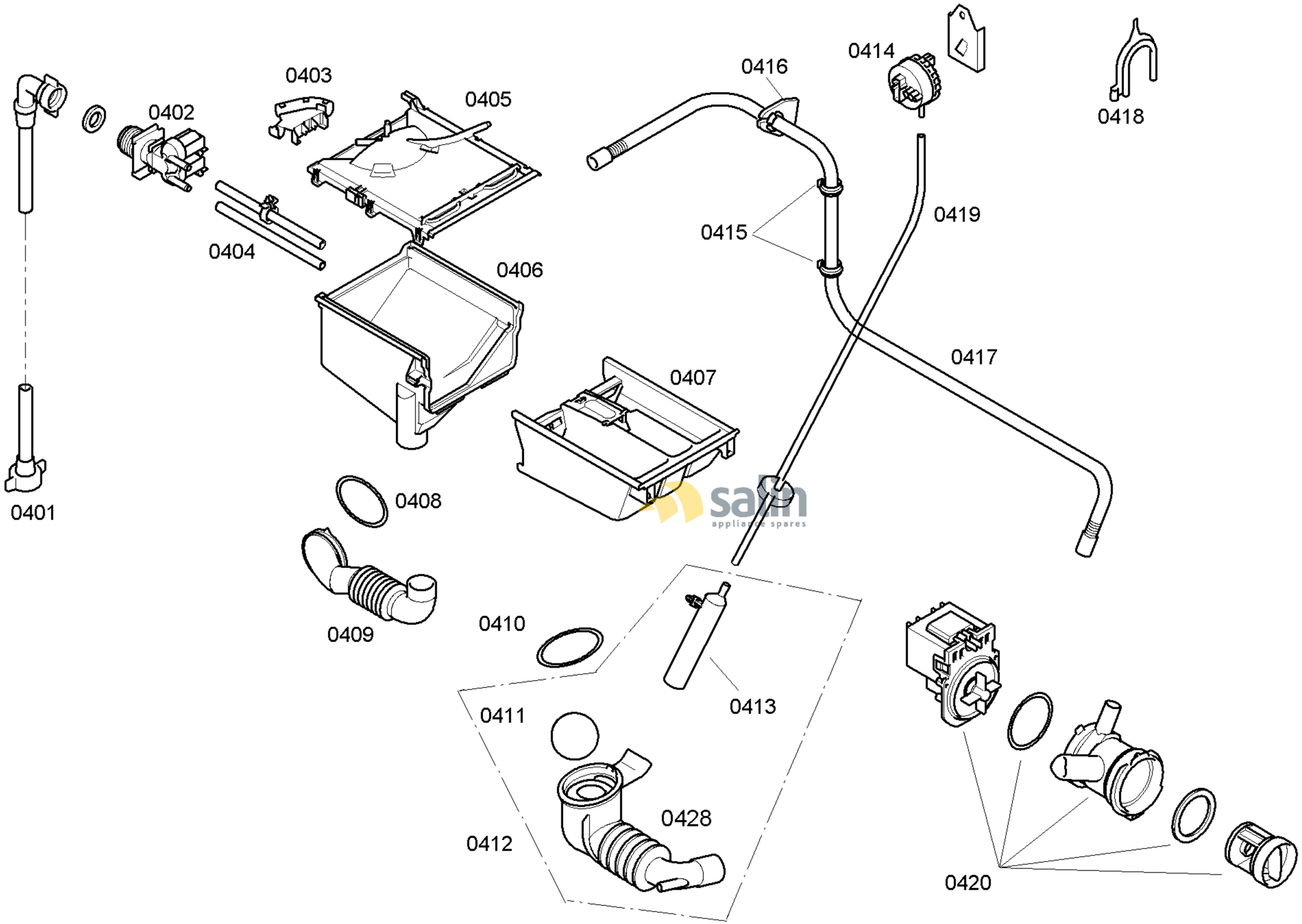

58300000123205 aet 000 a 4/4

FAMILY : WAE20161OE
MODEL NO: WAE20161OE/01
Check Position No/Part No or Replacement No