0199

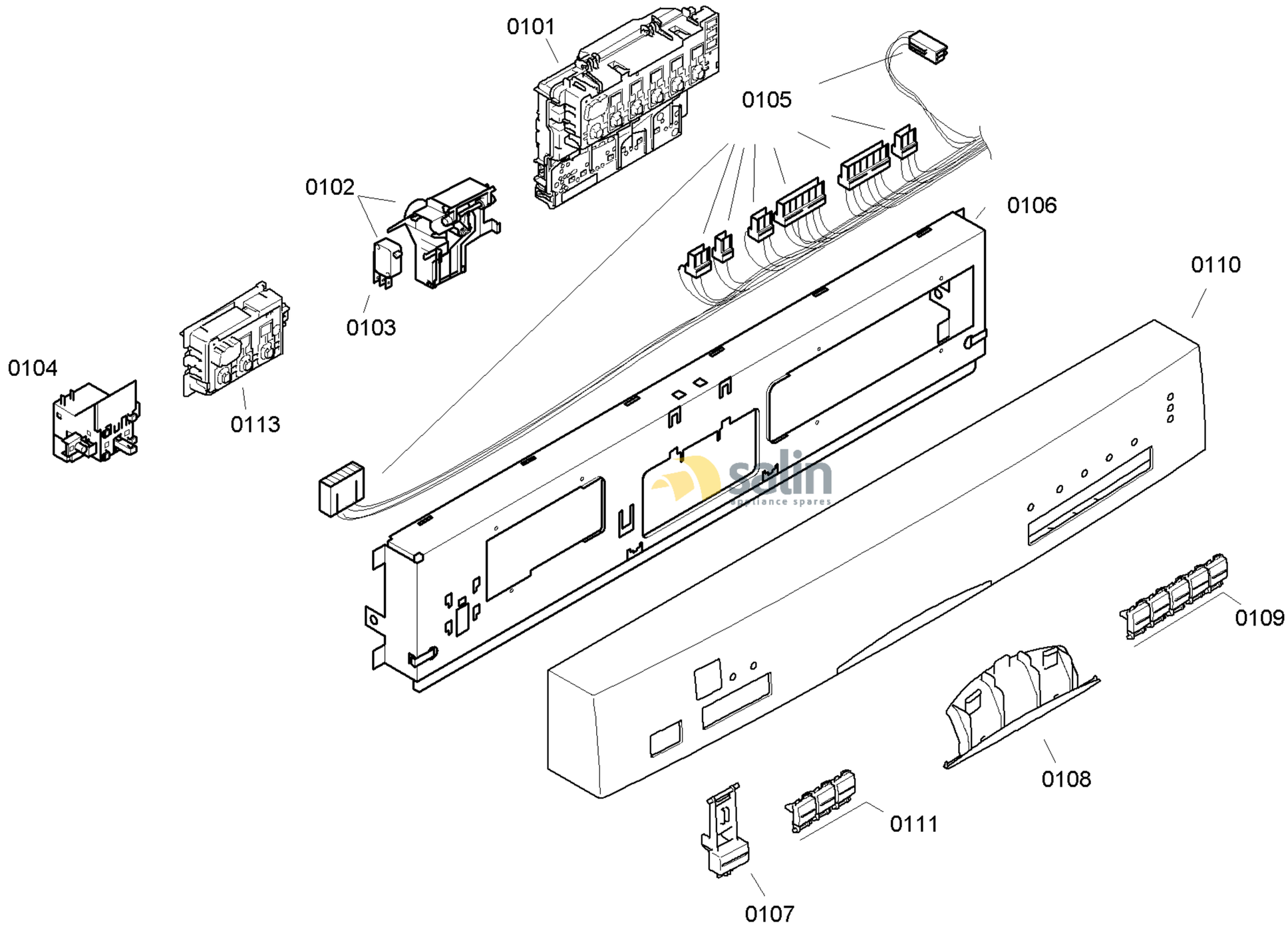

58300000130491 aet 000 a 1/6

FAMILY : SGS56E18GB
MODEL NO: SGS56E18GB/86
Check Position No/Part No or Replacement No

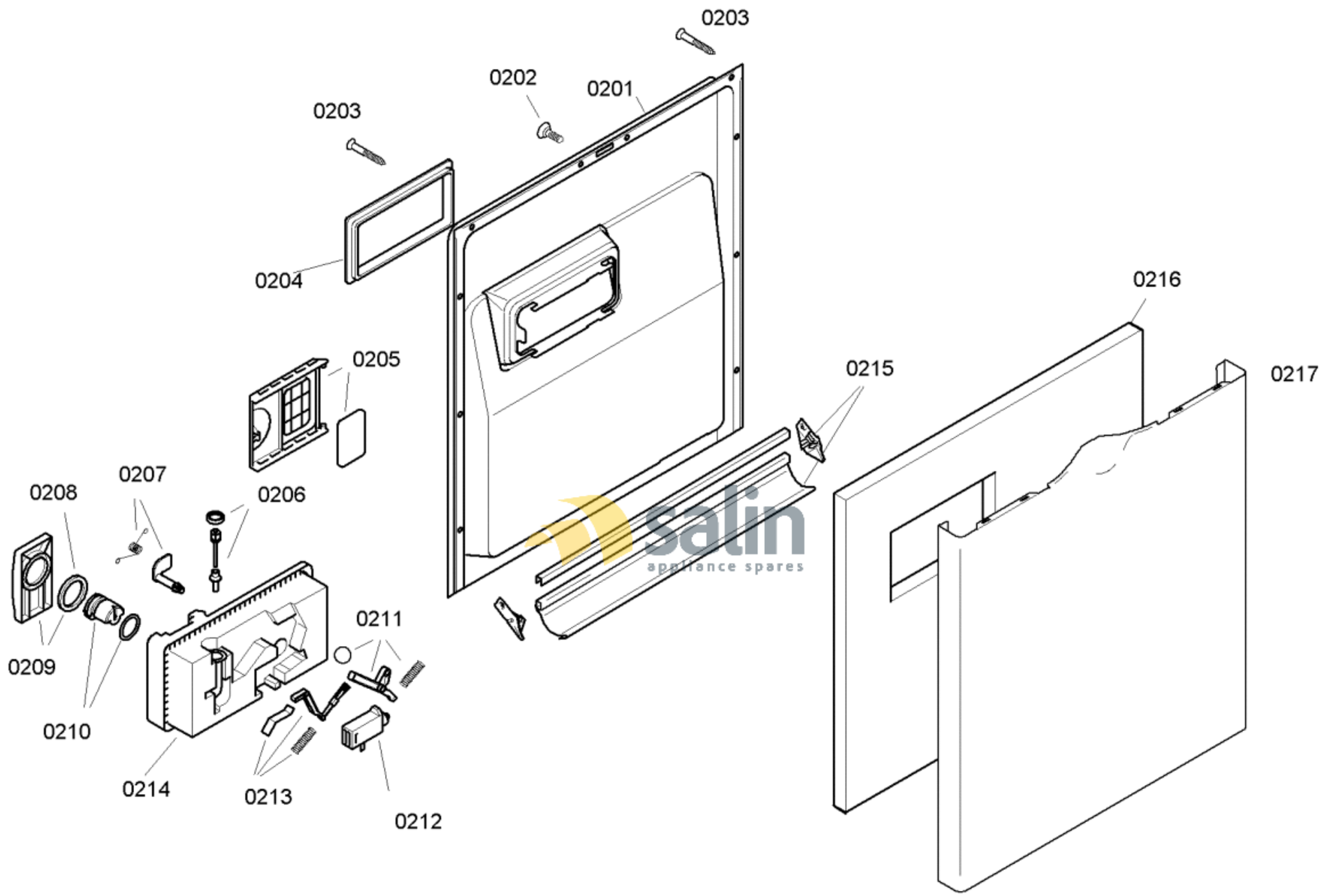

58300000130491 aet 000 a 2/6

FAMILY : SGS56E18GB

MODEL NO: SGS56E18GB/86

Check Position No/Part No or Replacement No

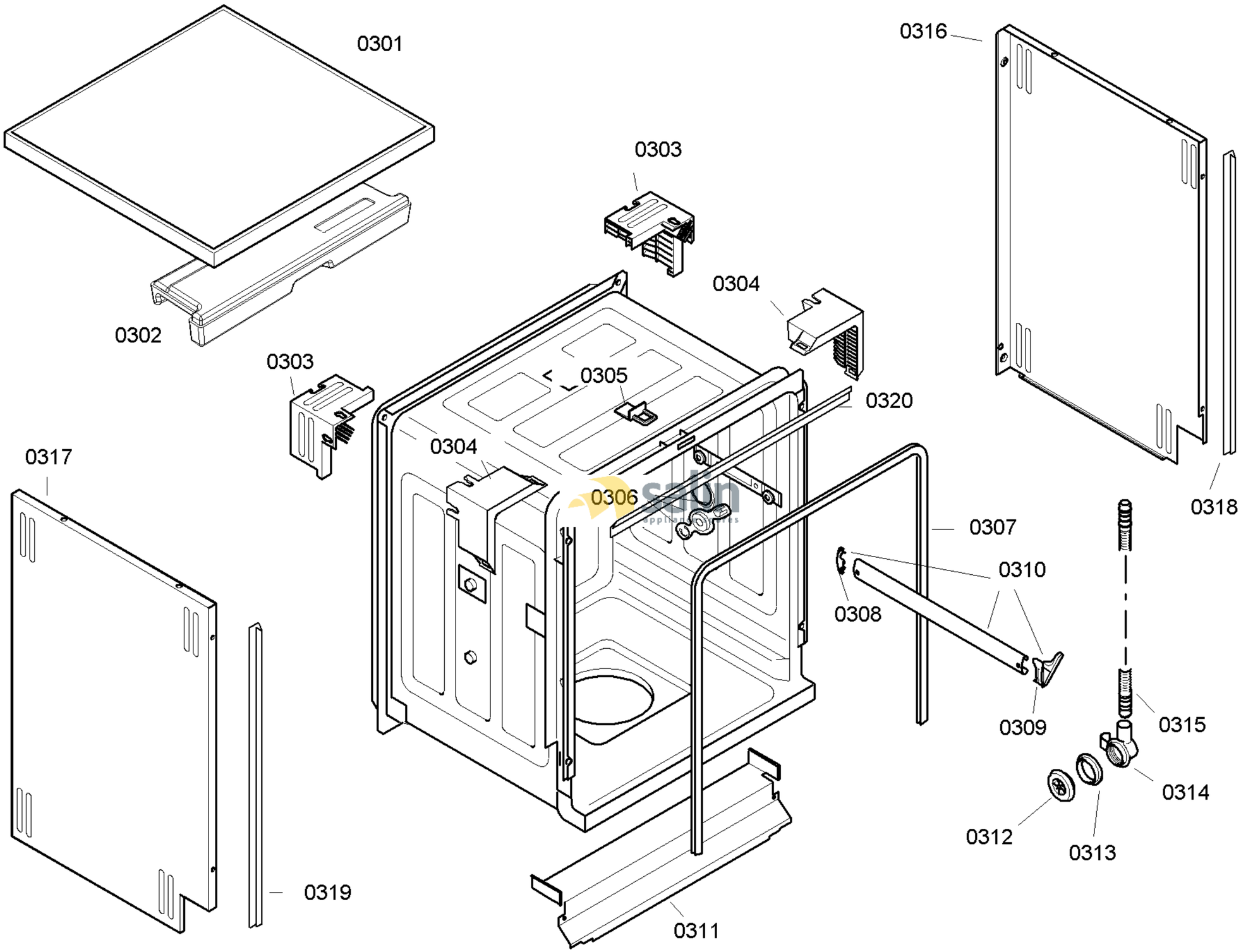

58300000130491 aet 000 a 3/6

FAMILY : SGS56E18GB
MODEL NO: SGS56E18GB/86
Check Position No/Part No or Replacement No

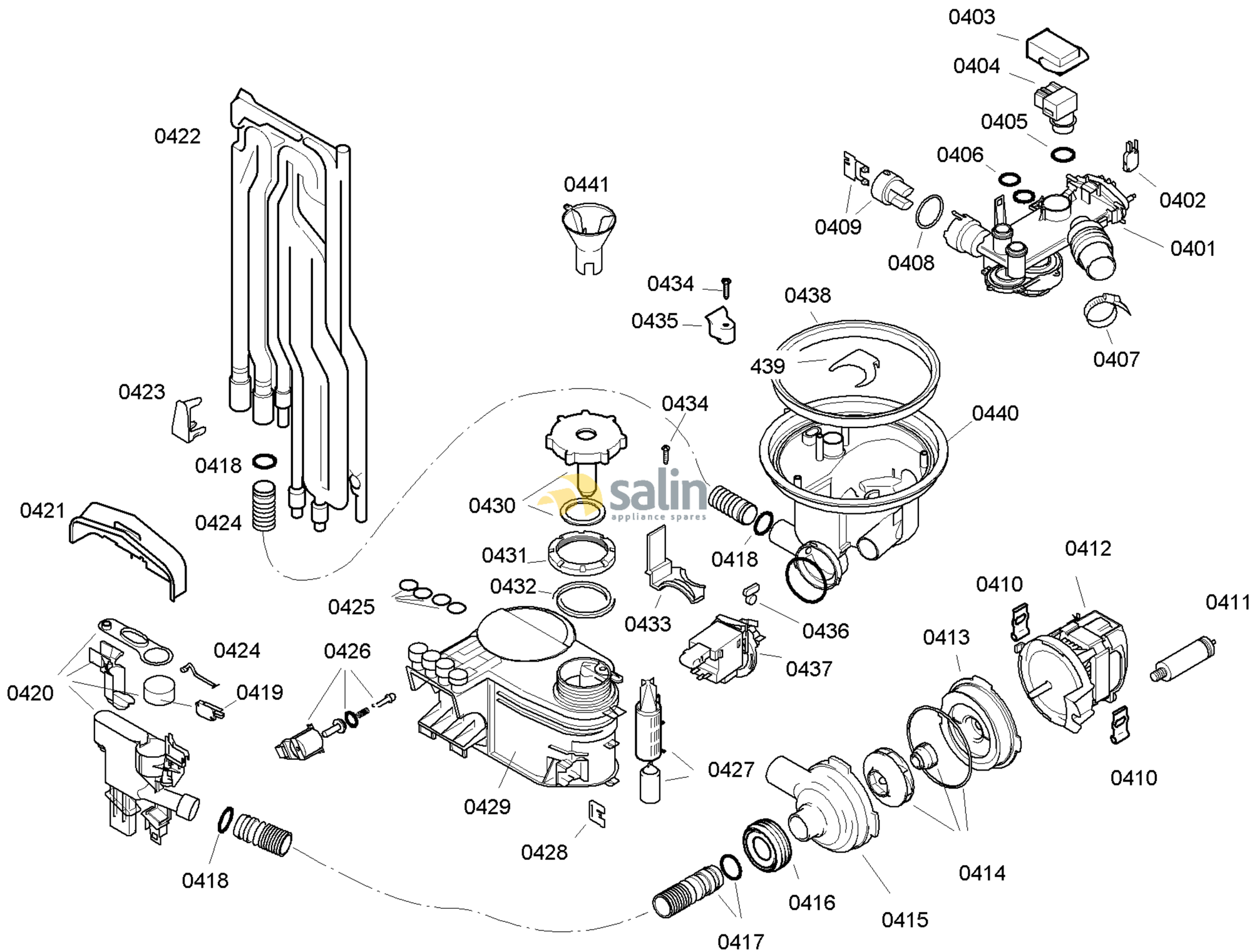

58300000130491 aet 000 a 4/6

FAMILY : SGS56E18GB
MODEL NO: SGS56E18GB/86
Check Position No/Part No or Replacement No

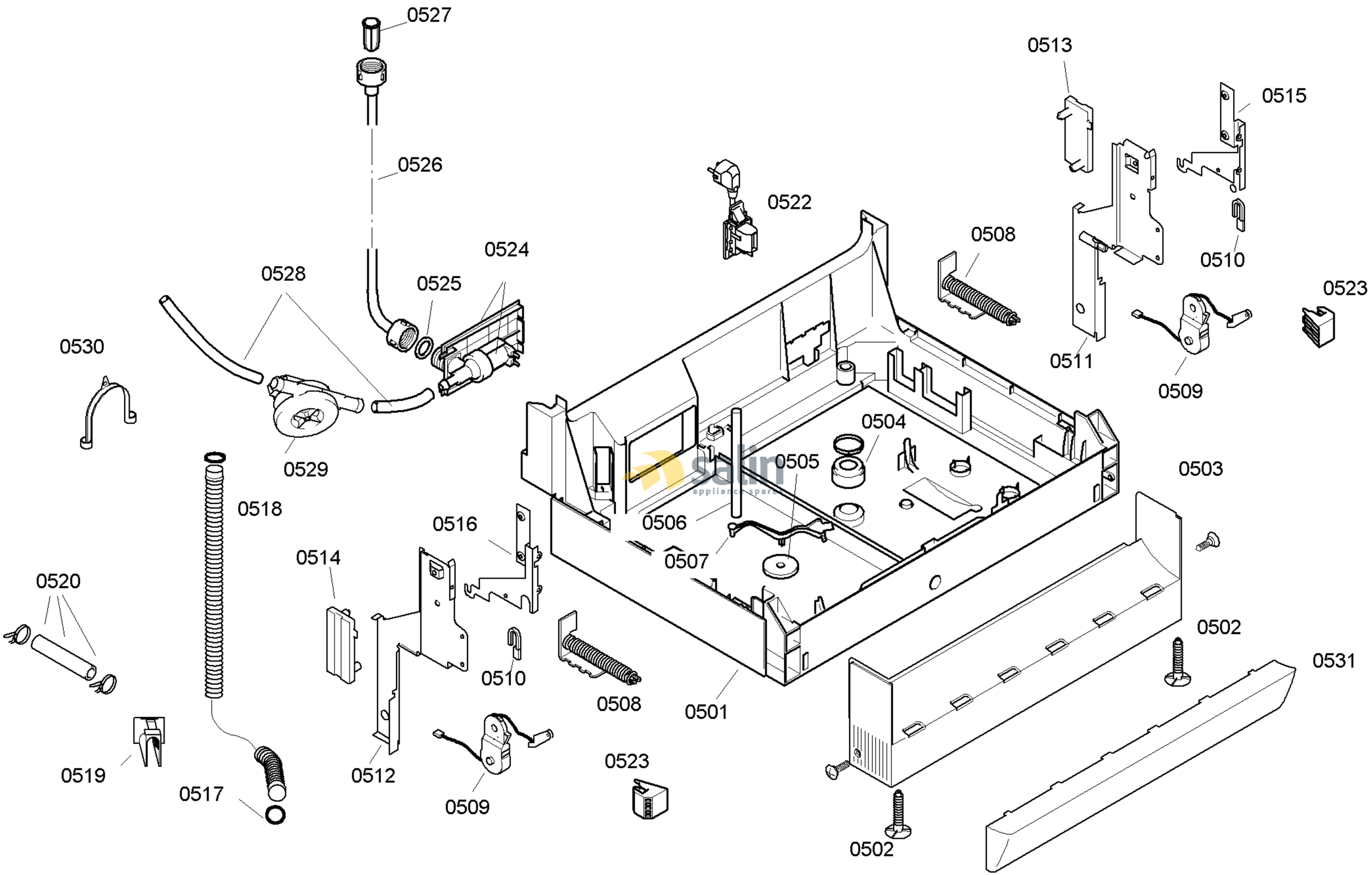

58300000130491 aet 000 a 5/6

FAMILY : SGS56E18GB
MODEL NO: SGS56E18GB/86
Check Position No/Part No or Replacement No

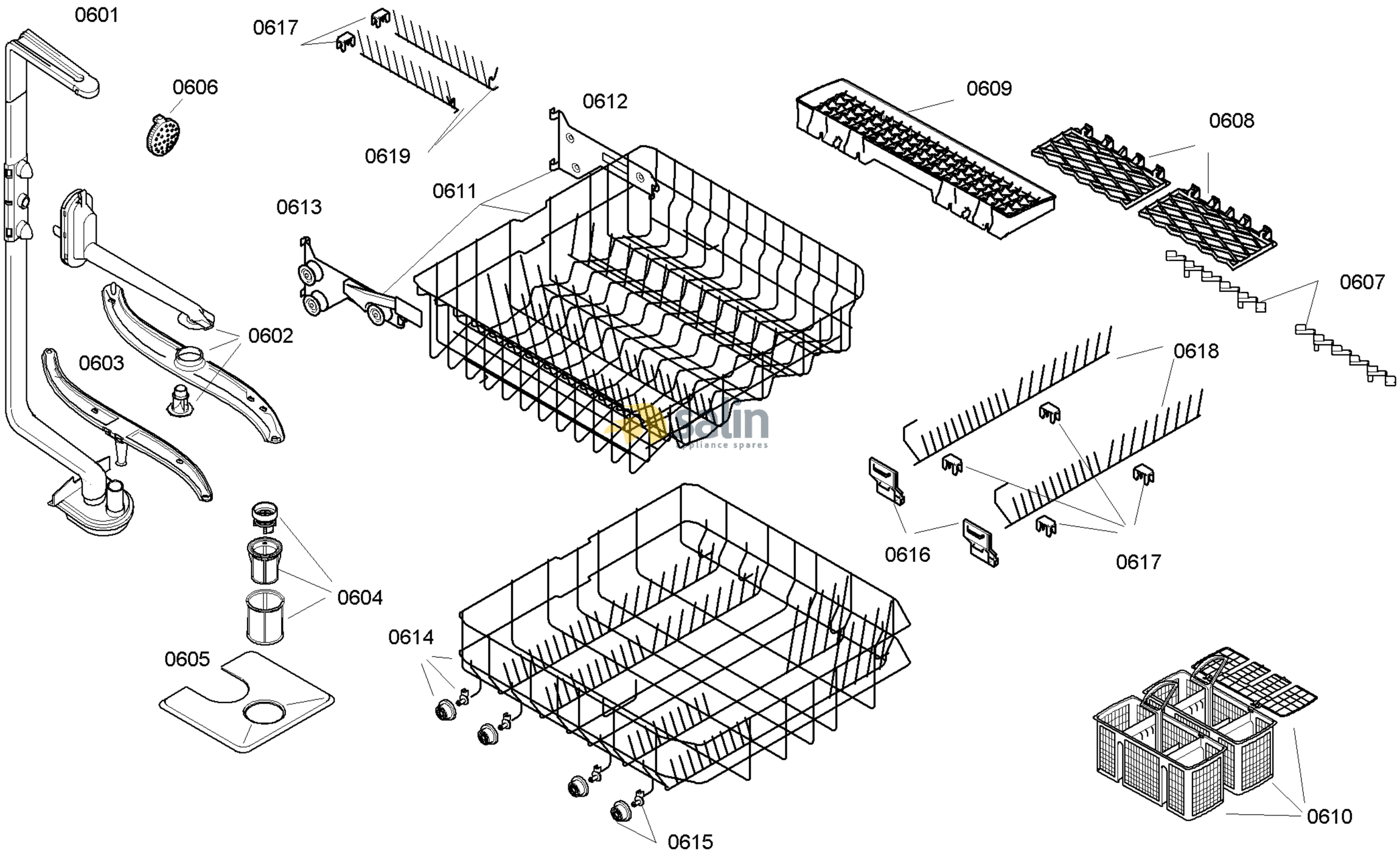

58300000130491 aet 000 a 6/6

FAMILY : SGS56E18GB
MODEL NO: SGS56E18GB/86
Check Position No/Part No or Replacement No