0199

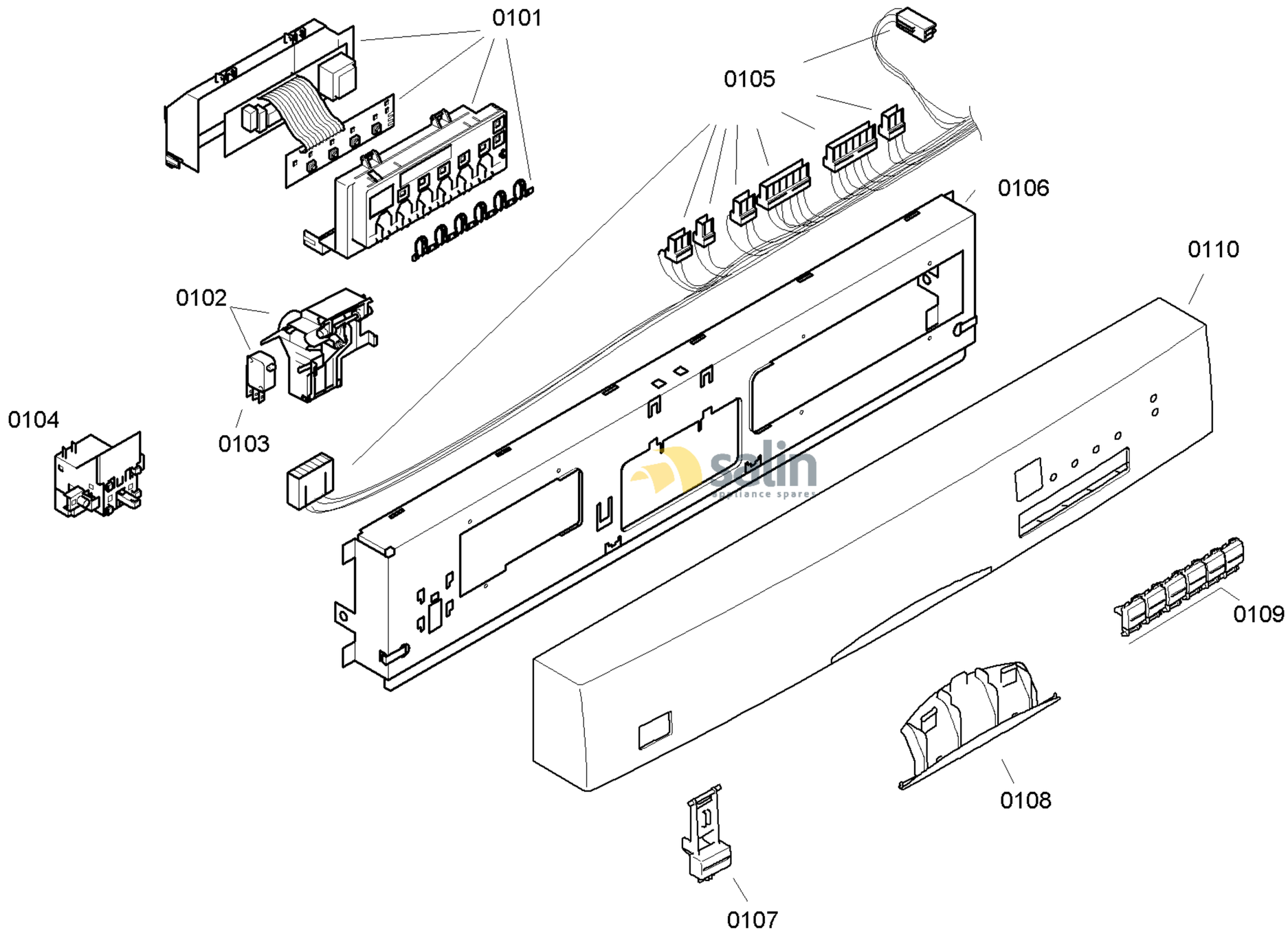

58300000130414 aet 000 a 1/6

FAMILY : SGS45M42EU
MODEL NO: SGS45M42EU/86
Check Position No/Part No or Replacement No

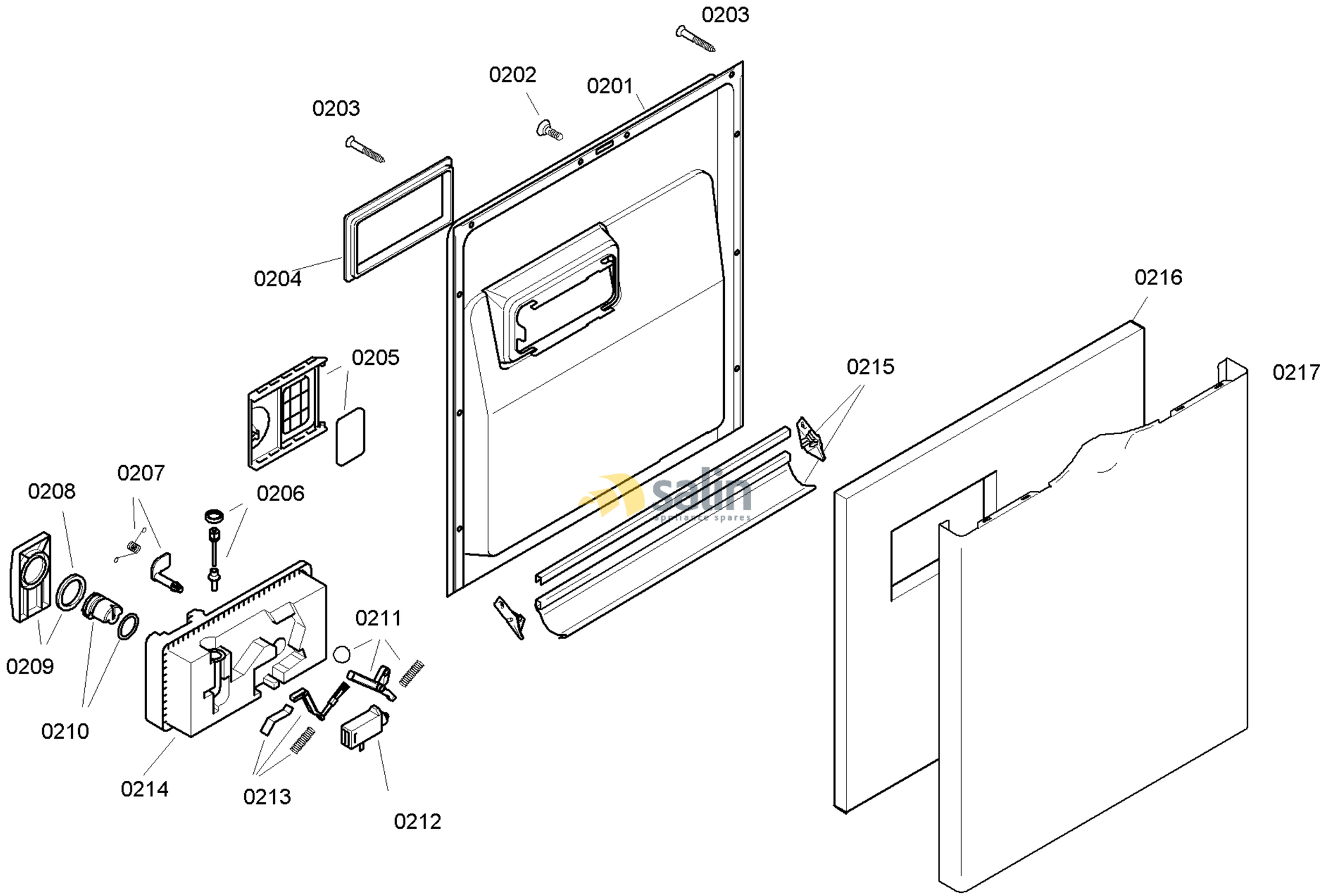

58300000130414 aet 000 a 2/6

FAMILY : SGS45M42EU
MODEL NO: SGS45M42EU/86
Check Position No/Part No or Replacement No

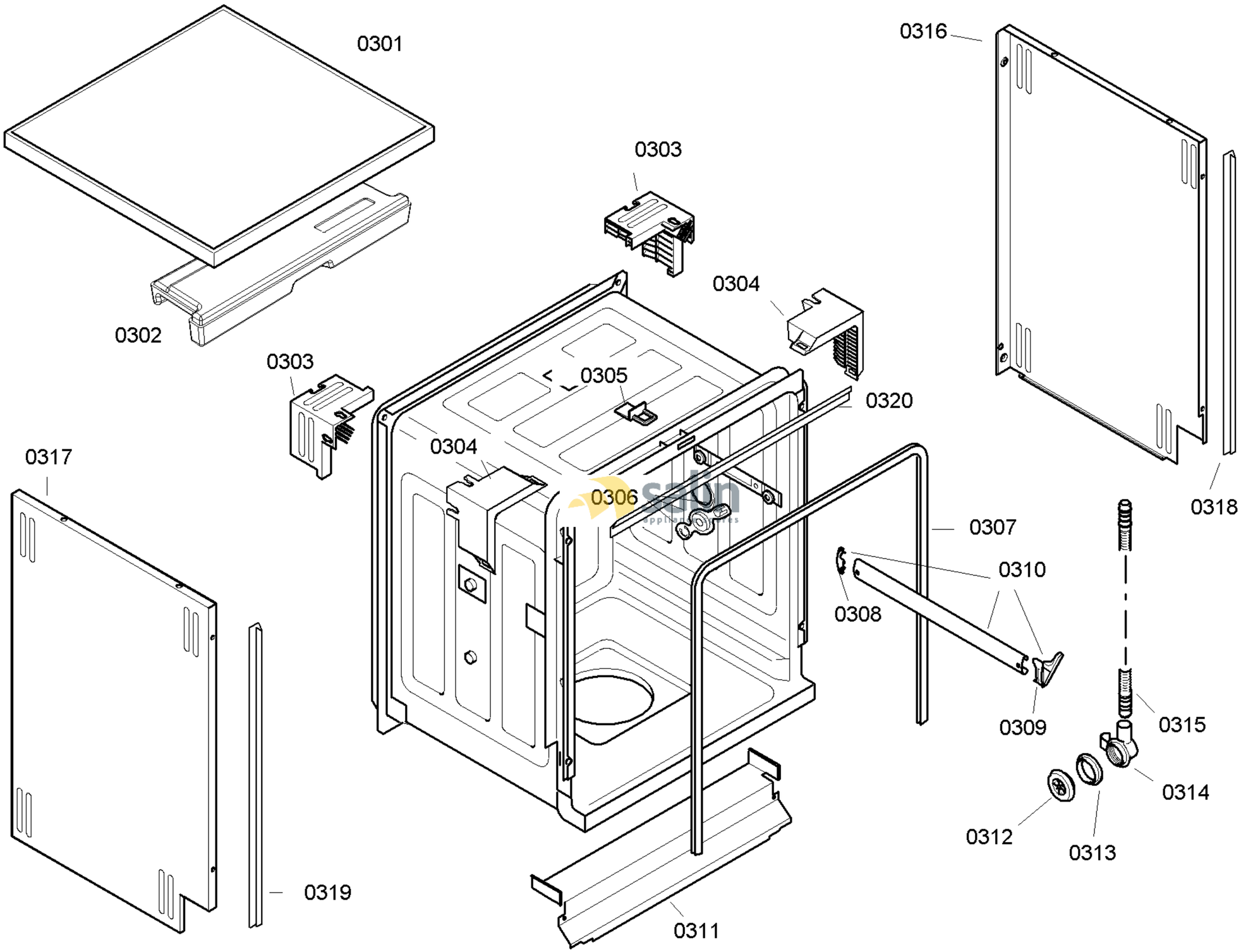

58300000130414 aet 000 a 3/6

FAMILY : SGS45M42EU
MODEL NO: SGS45M42EU/86
Check Position No/Part No or Replacement No

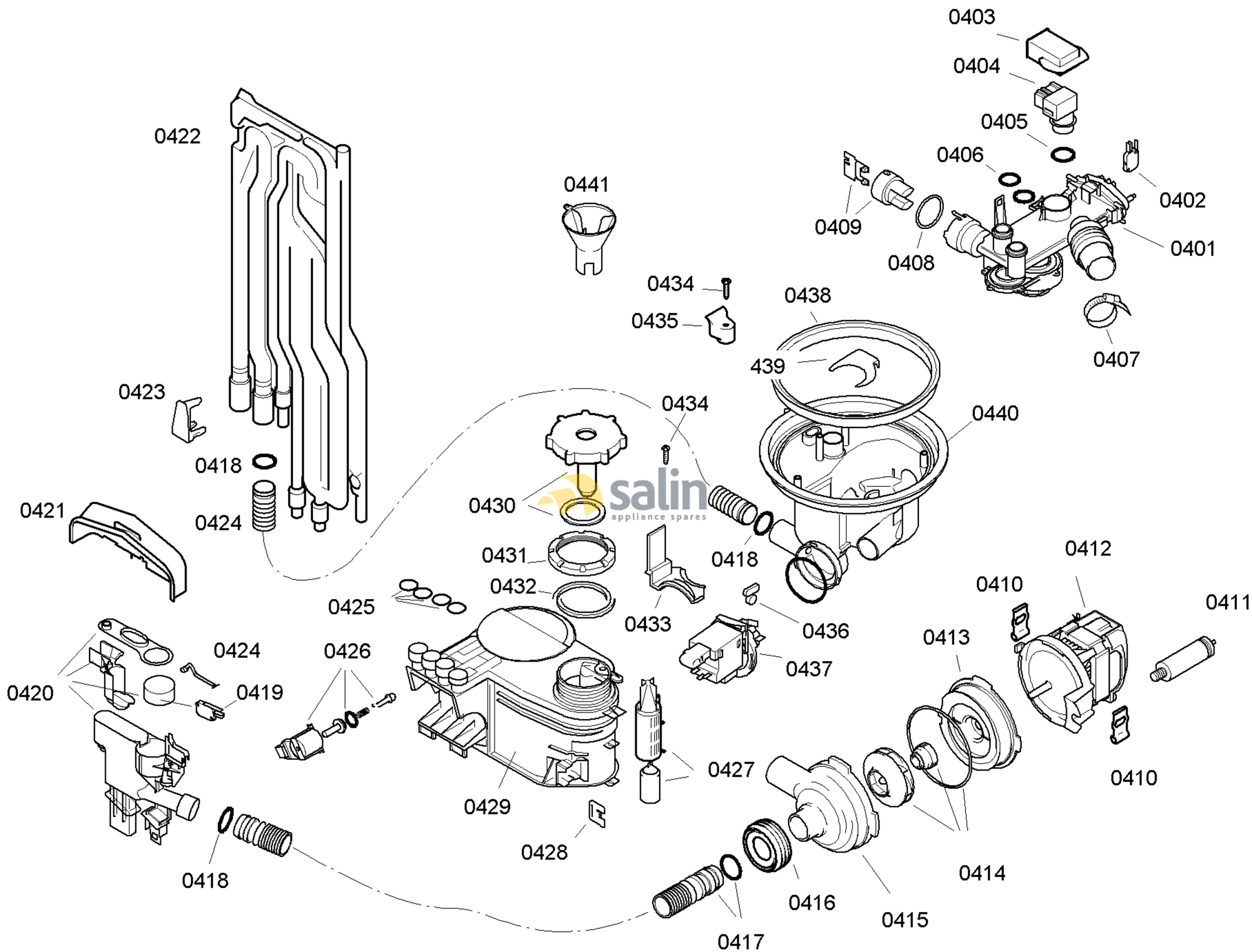

58300000130414 aet 000 a 4/6

FAMILY : SGS45M42EU
MODEL NO: SGS45M42EU/86
Check Position No/Part No or Replacement No

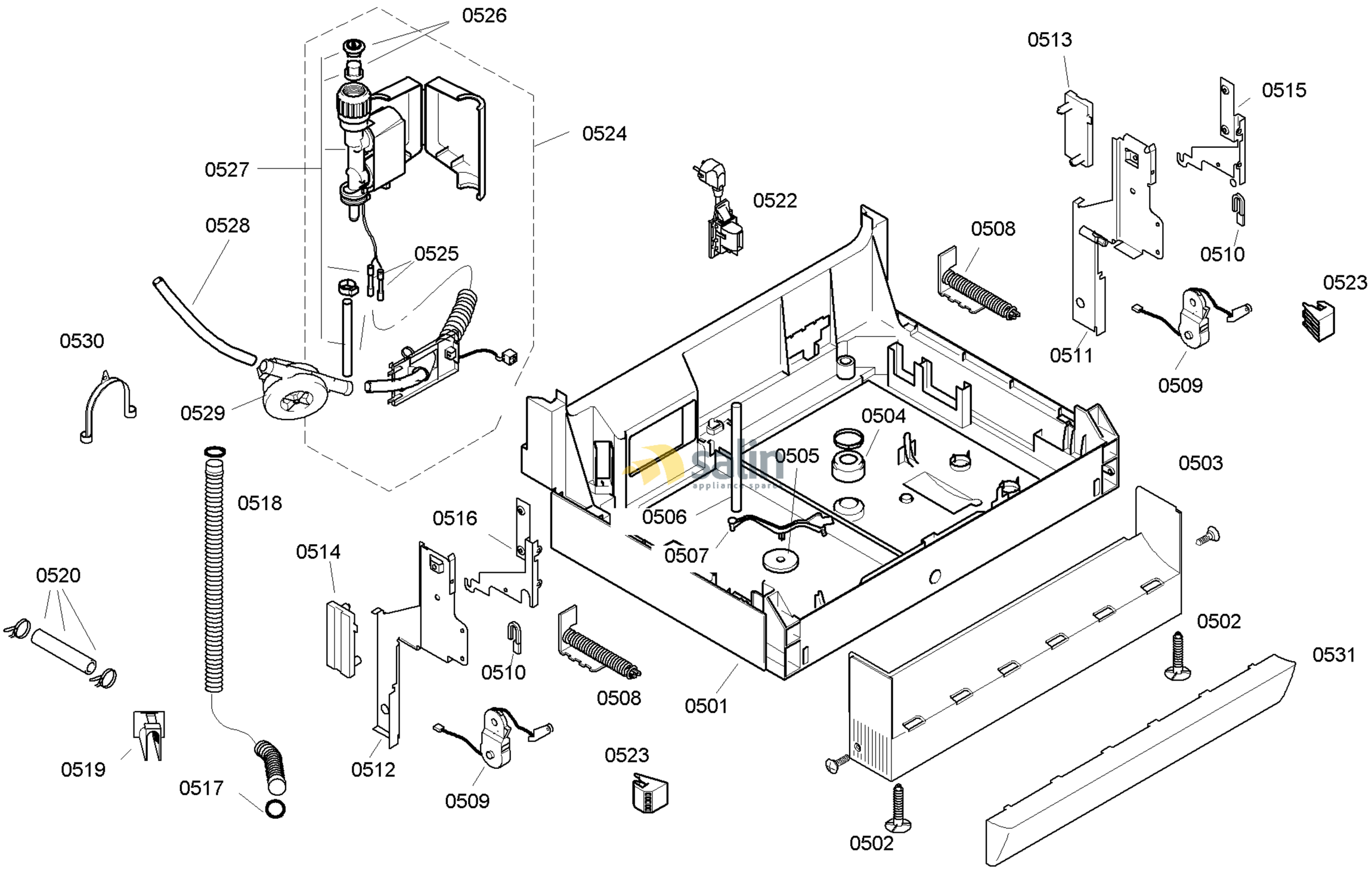

58300000130414 aet 000 a 5/6

FAMILY : SGS45M42EU
MODEL NO: SGS45M42EU/86
Check Position No/Part No or Replacement No

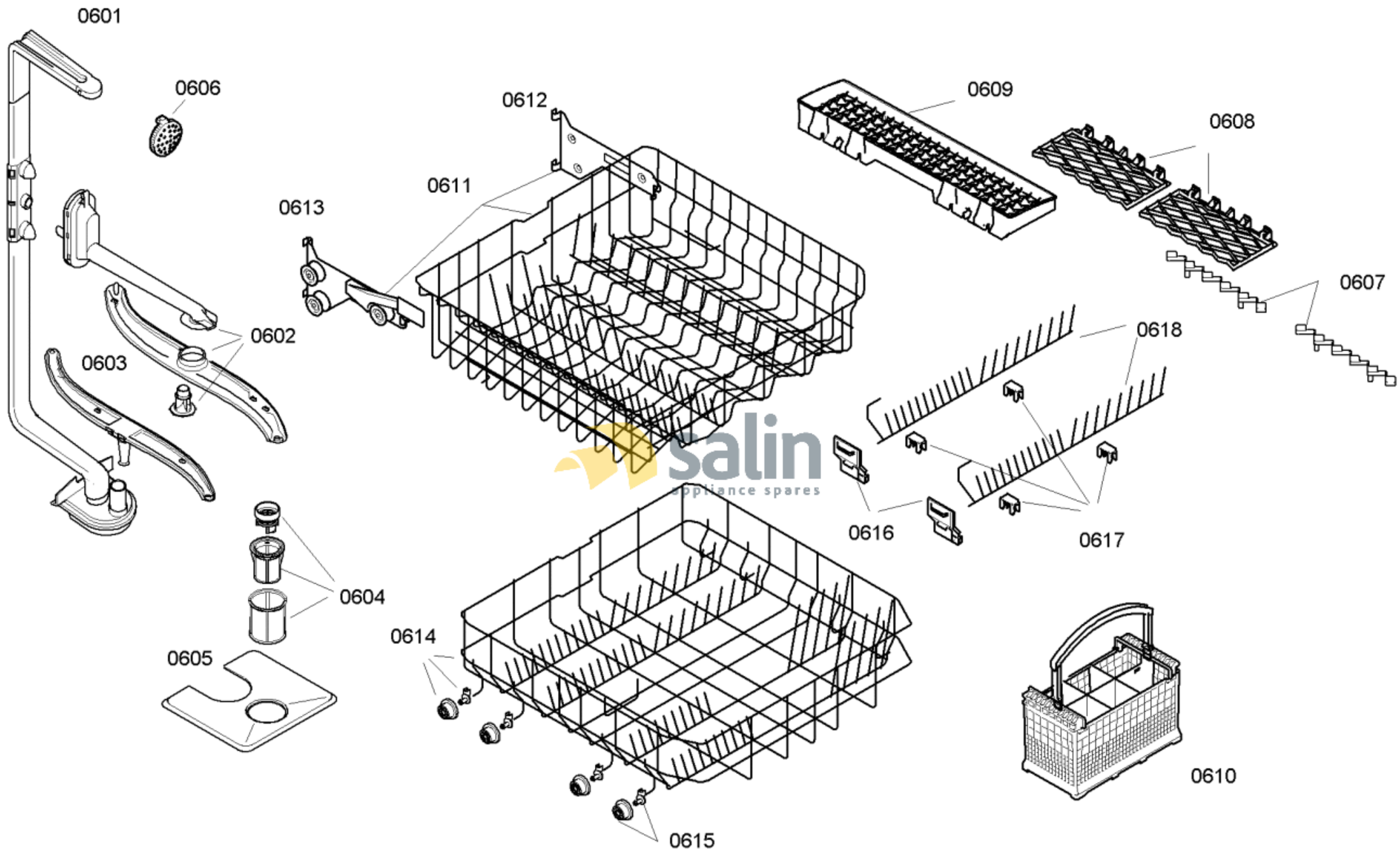

58300000130414 aet 000 a 6/6

FAMILY : SGS45M42EU

MODEL NO: SGS45M42EU/86

Check Position No/Part No or Replacement No