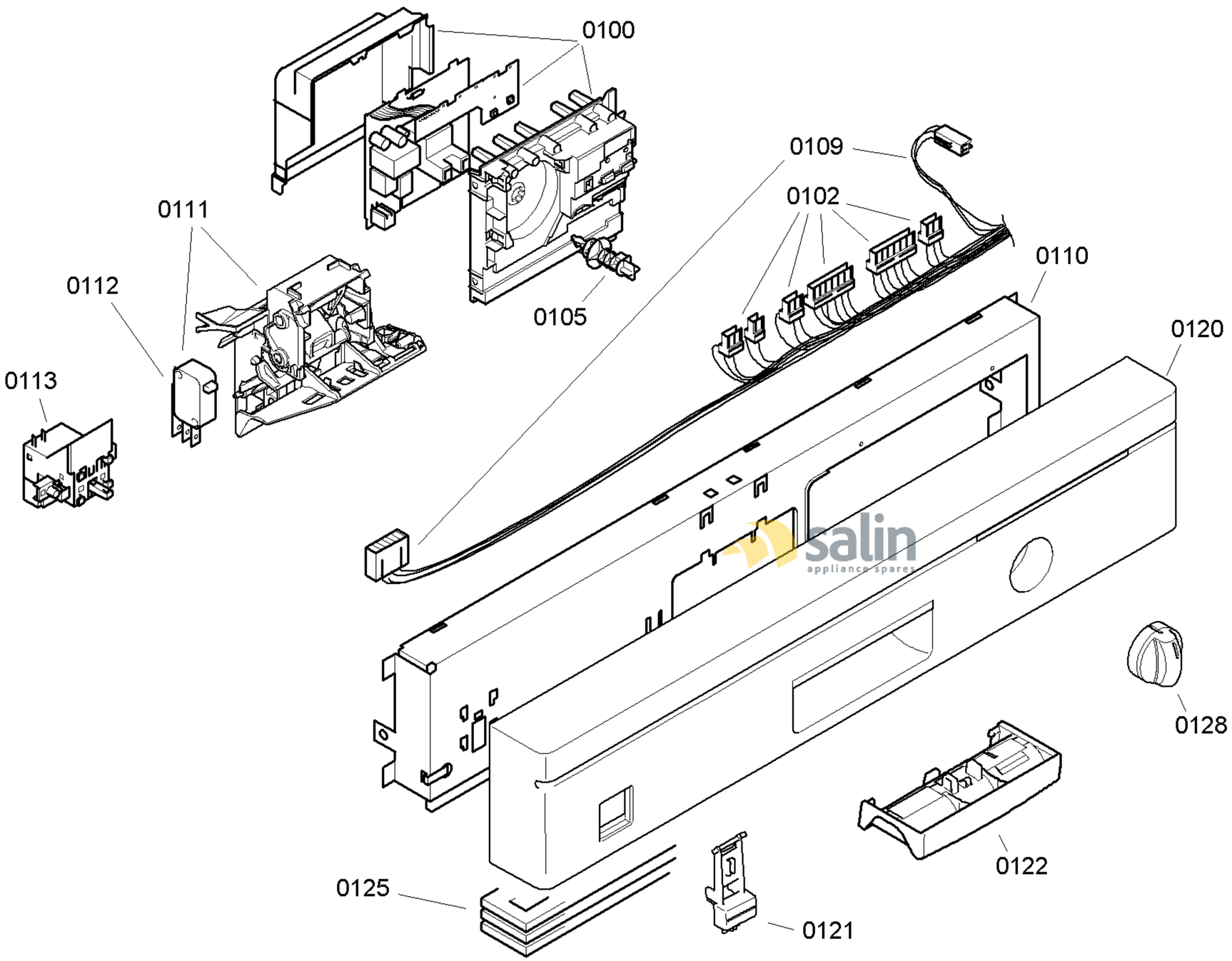

58300000122796 aet 000 c 1/6

FAMILY : SGI33E22EU
MODEL NO: SGI33E22EU/26
Check Position No/Part No or Replacement No

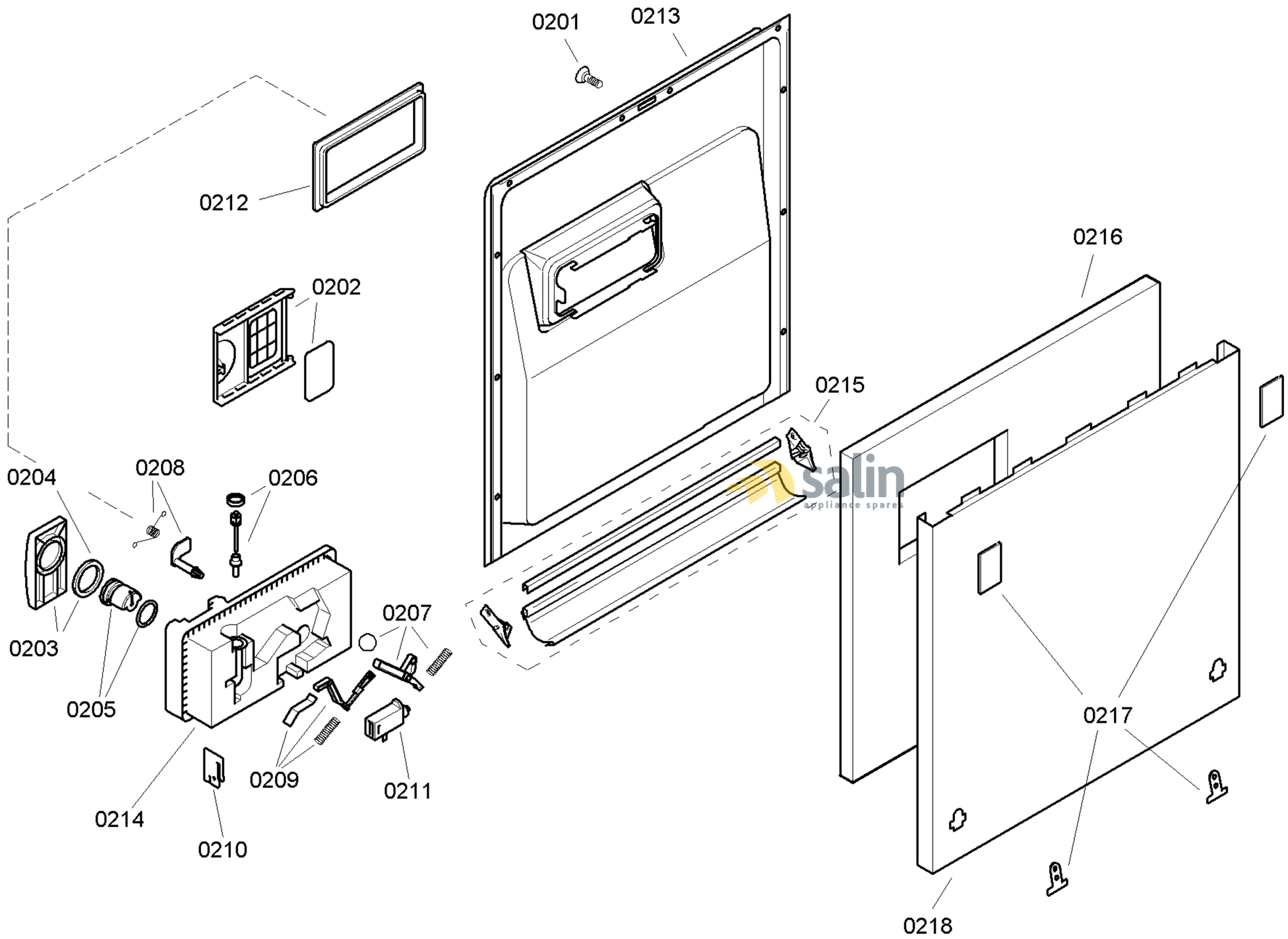

58300000122796 aet 000 c 2/6

FAMILY : SGI33E22EU
MODEL NO: SGI33E22EU/26
Check Position No/Part No or Replacement No

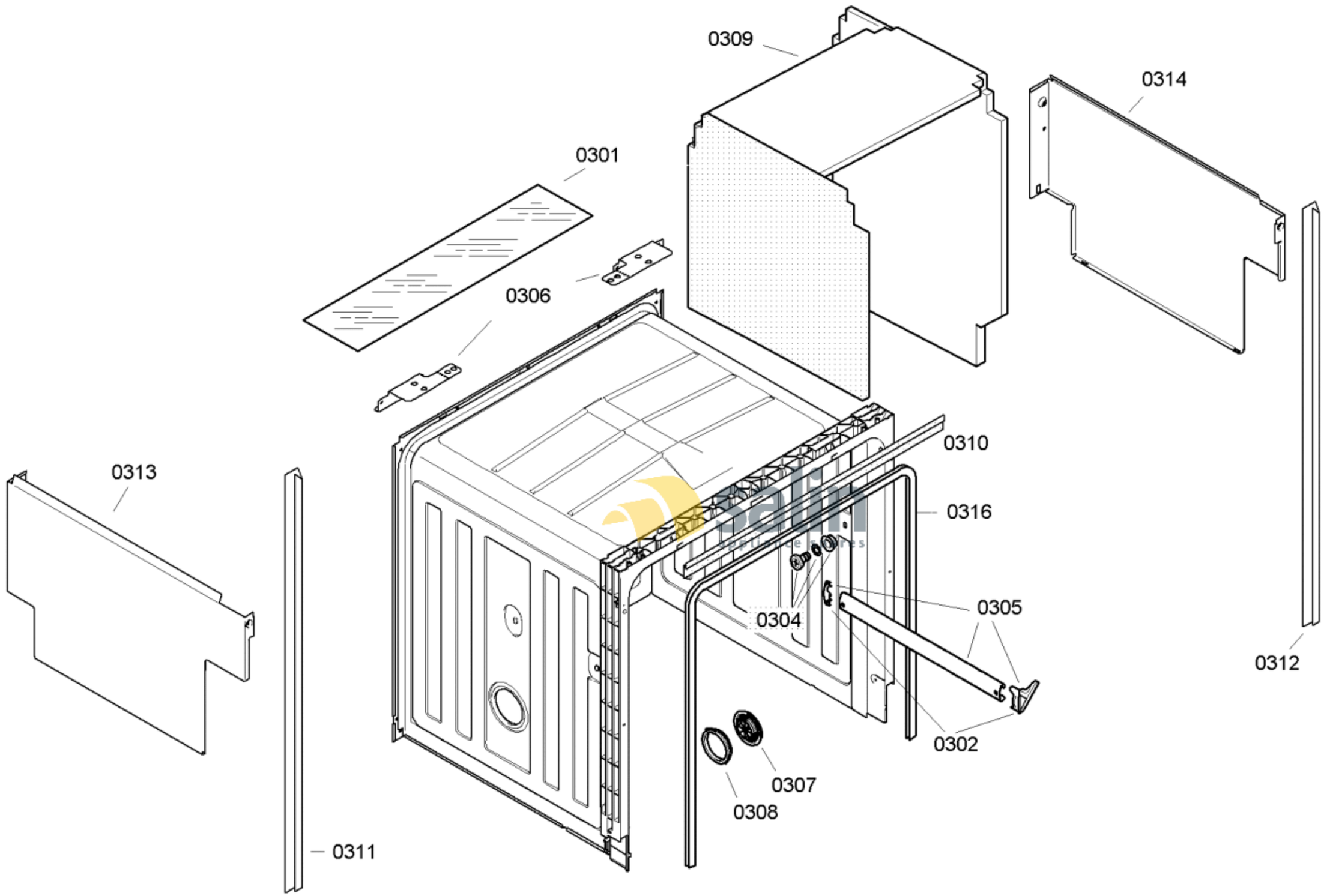

58300000122796 aet 000 c 3/6

FAMILY : SGI33E22EU

MODEL NO: SGI33E22EU/26

Check Position No/Part No or Replacement No

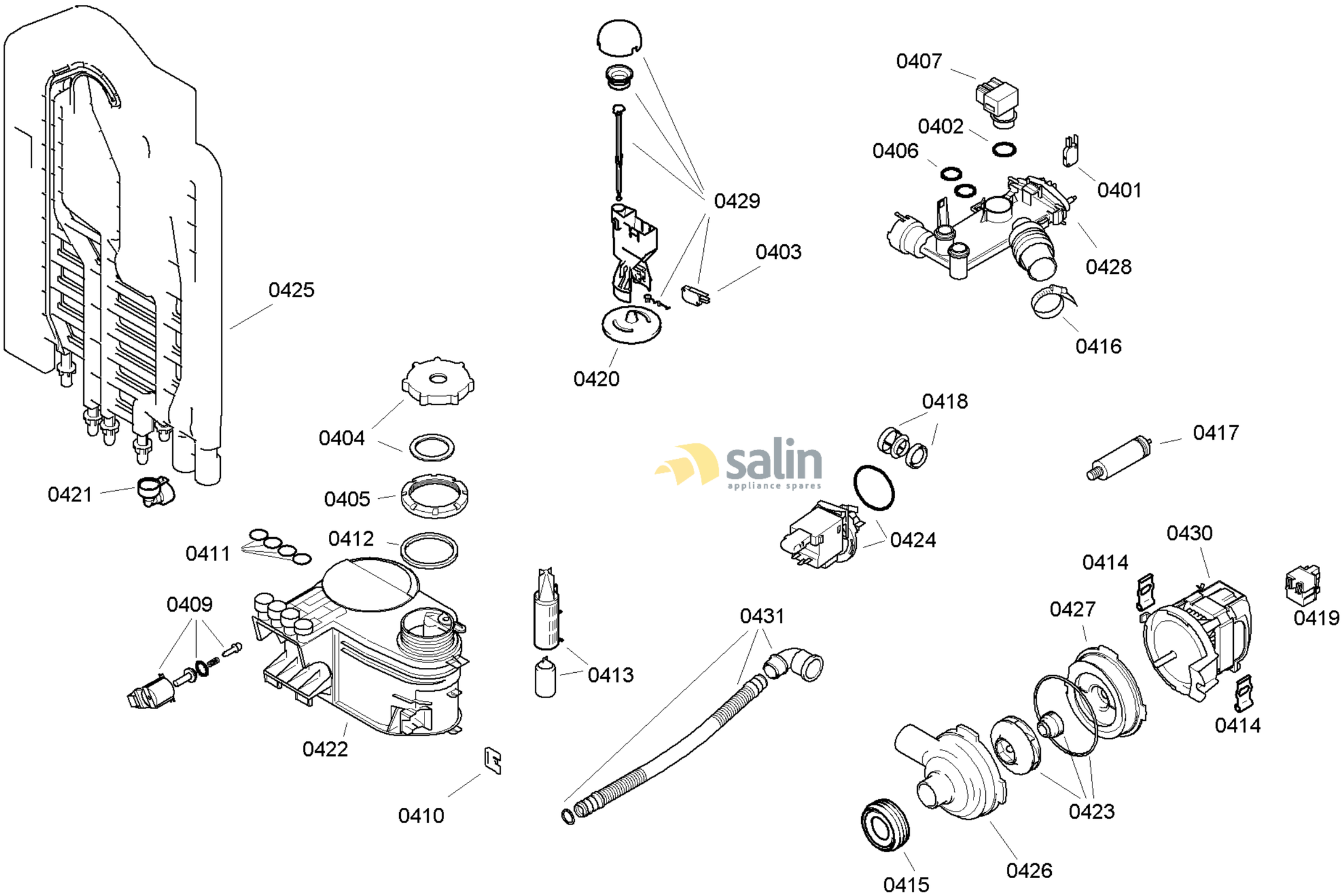

58300000122796 aet 000 c 4/6

FAMILY : SGI33E22EU
MODEL NO: SGI33E22EU/26
Check Position No/Part No or Replacement No

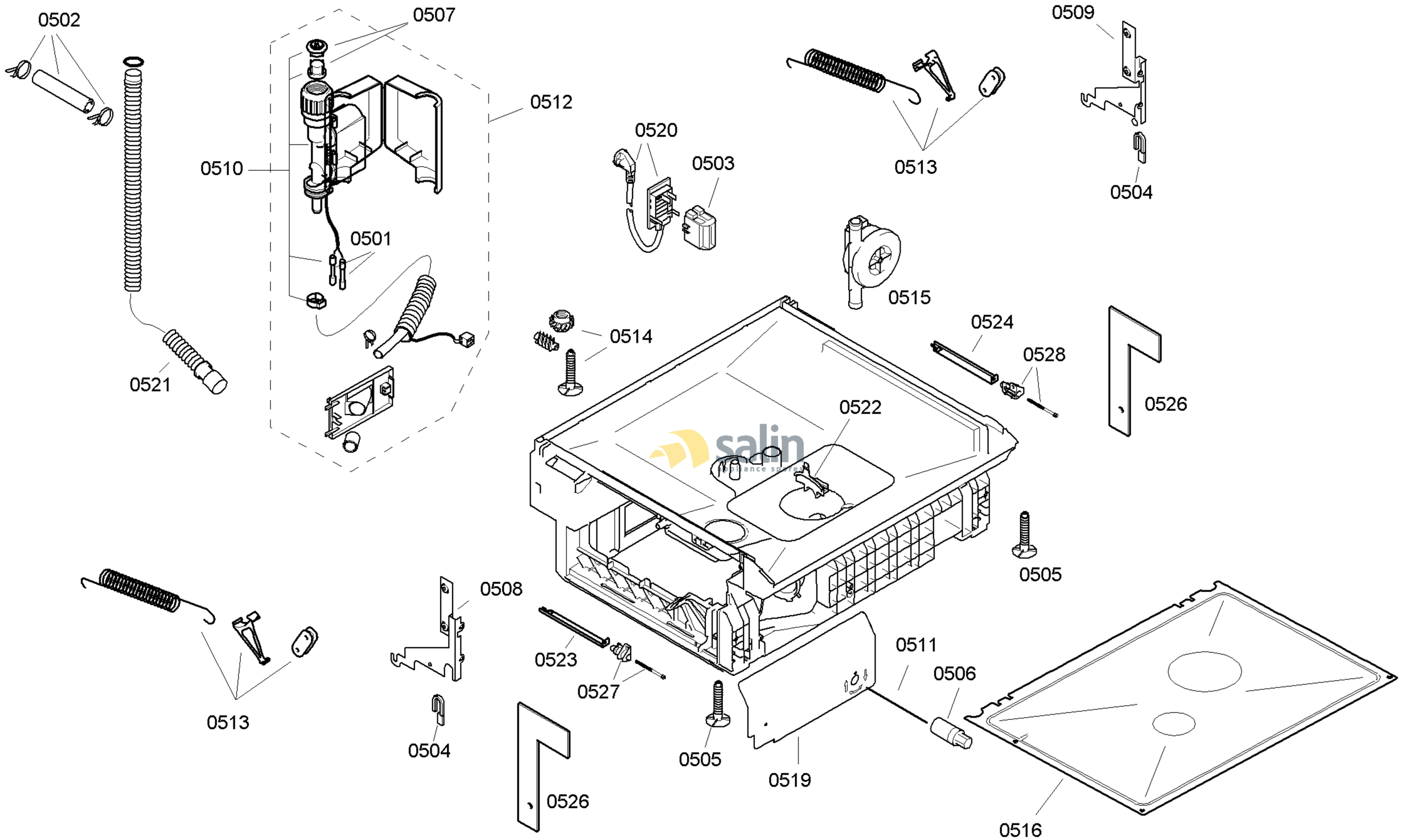

58300000122796 aet 000 c 5/6

FAMILY : SGI33E22EU
MODEL NO: SGI33E22EU/26
Check Position No/Part No or Replacement No

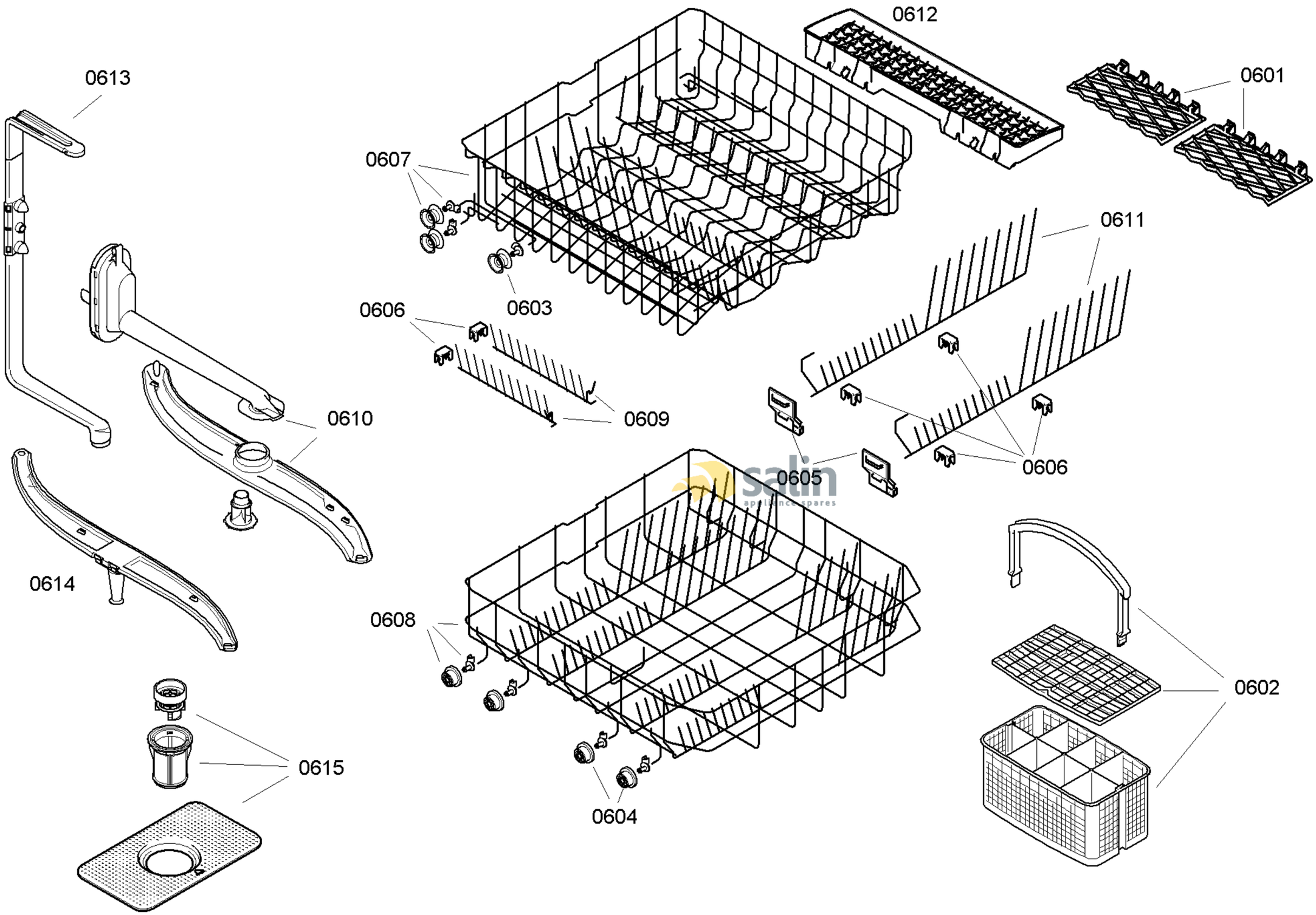

58300000122796 aet 000 c 6/6

FAMILY : SGI33E22EU
MODEL NO: SGI33E22EU/26
Check Position No/Part No or Replacement No