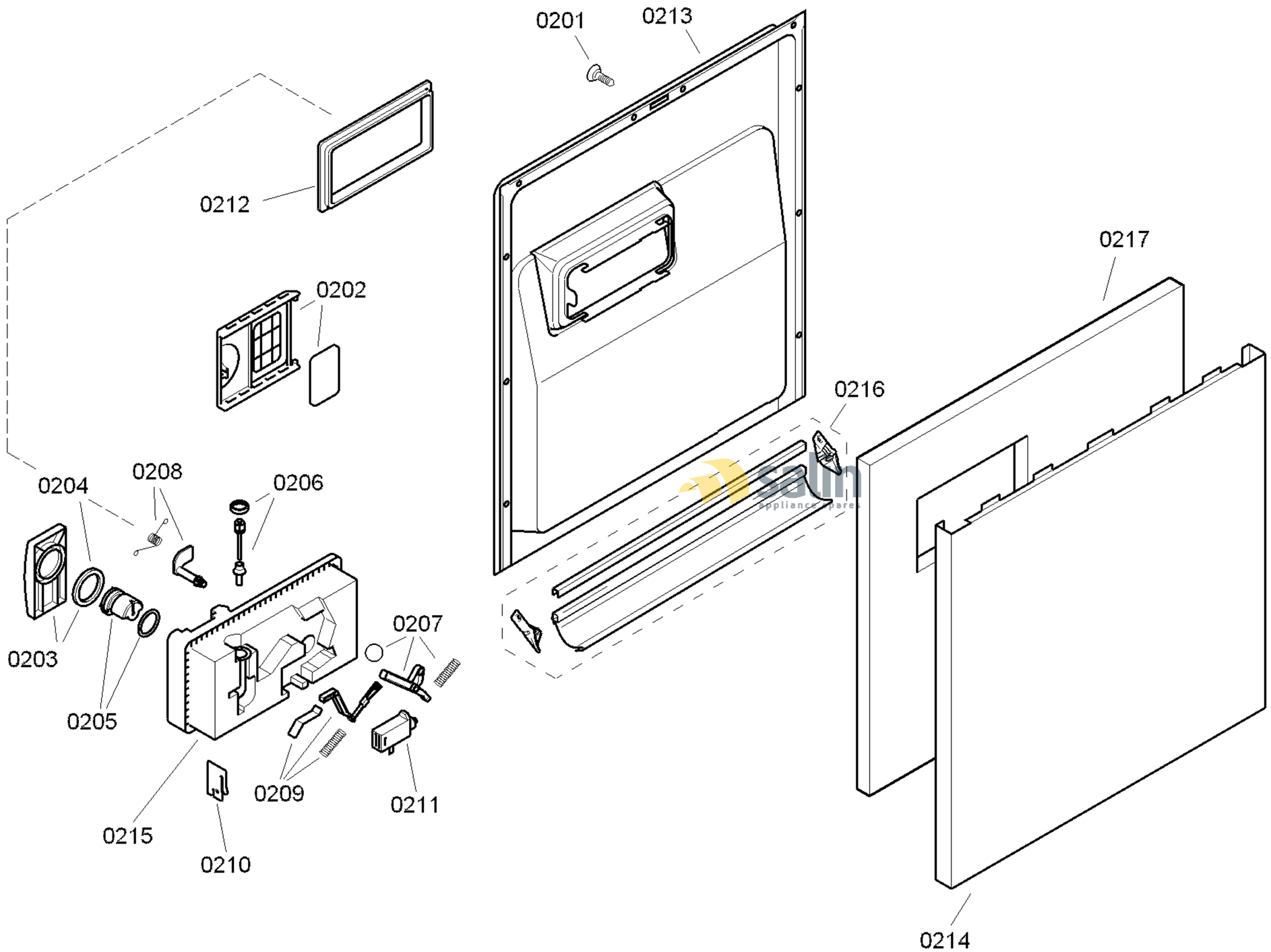

58300000137019 aet 000 c 2/6

FAMILY : SGU84E15
MODEL NO: SGU84E15/23
Check Position No/Part No or Replacement No

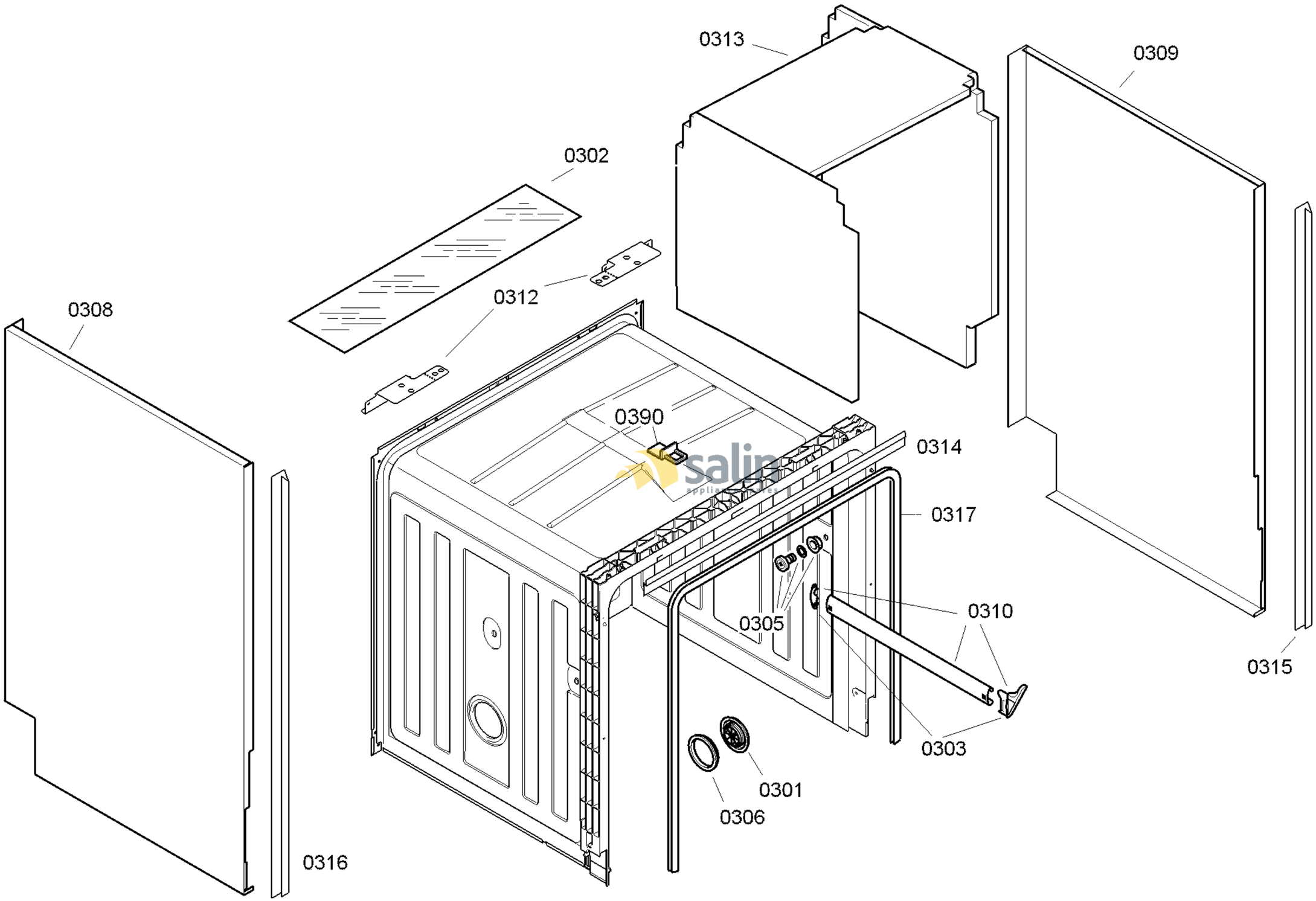

58300000137019 aet 000 c 3/6

FAMILY : SGU84E15
MODEL NO: SGU84E15/23
Check Position No/Part No or Replacement No

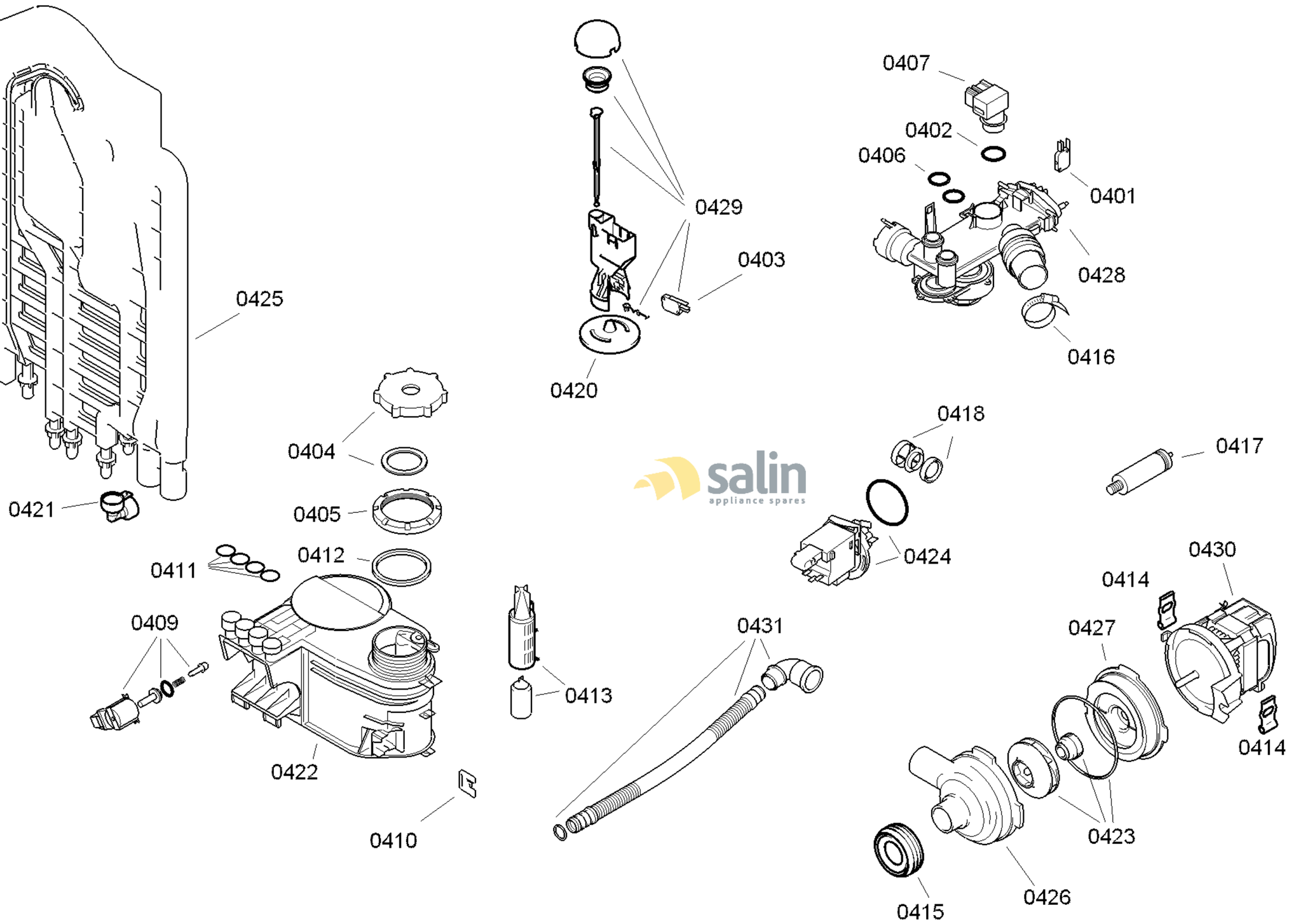

58300000137019 aet 000 c 4/6

FAMILY : SGU84E15
MODEL NO: SGU84E15/23
Check Position No/Part No or Replacement No

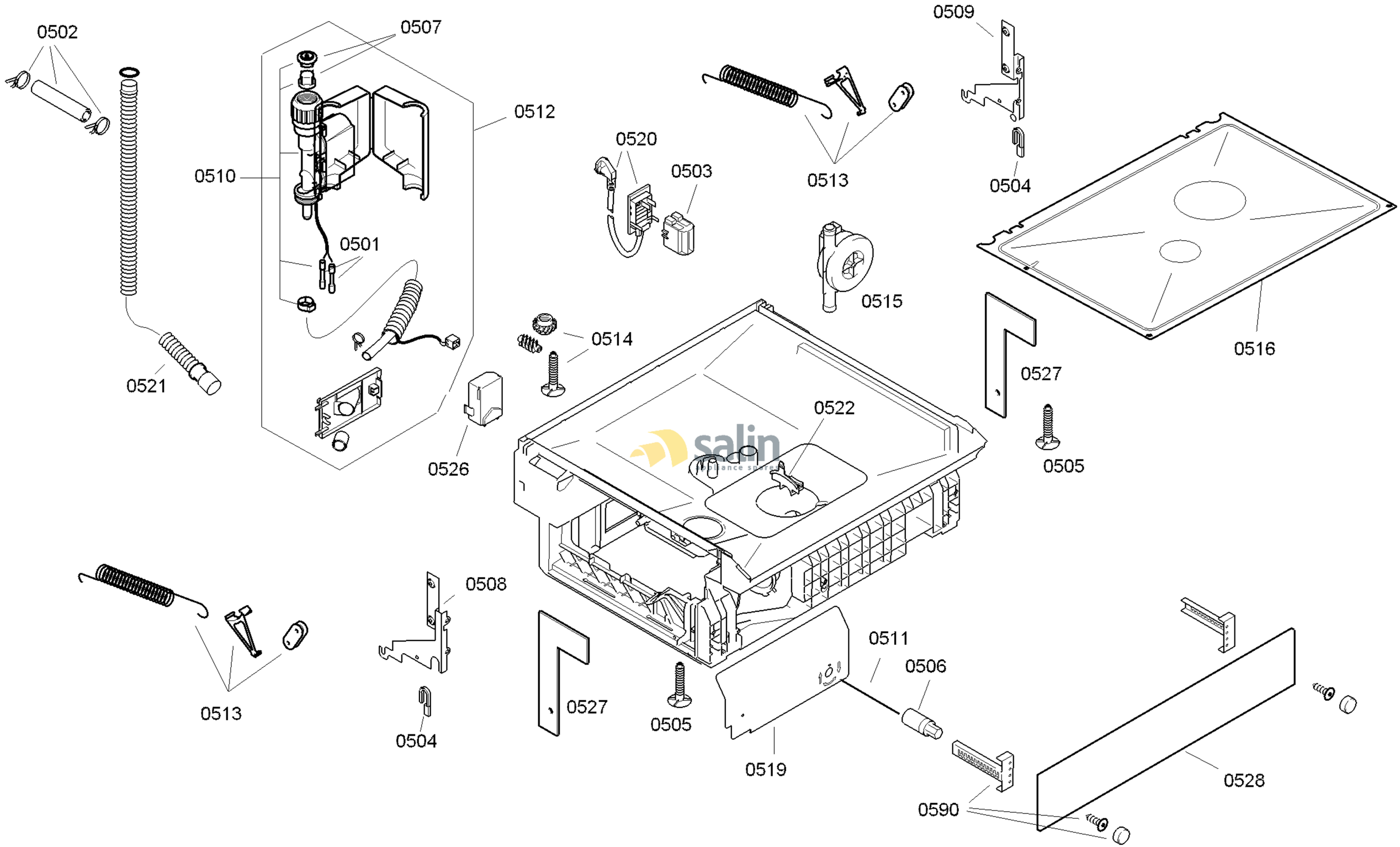

58300000137019 aet 000 c 5/6

FAMILY : SGU84E15
MODEL NO: SGU84E15/23
Check Position No/Part No or Replacement No

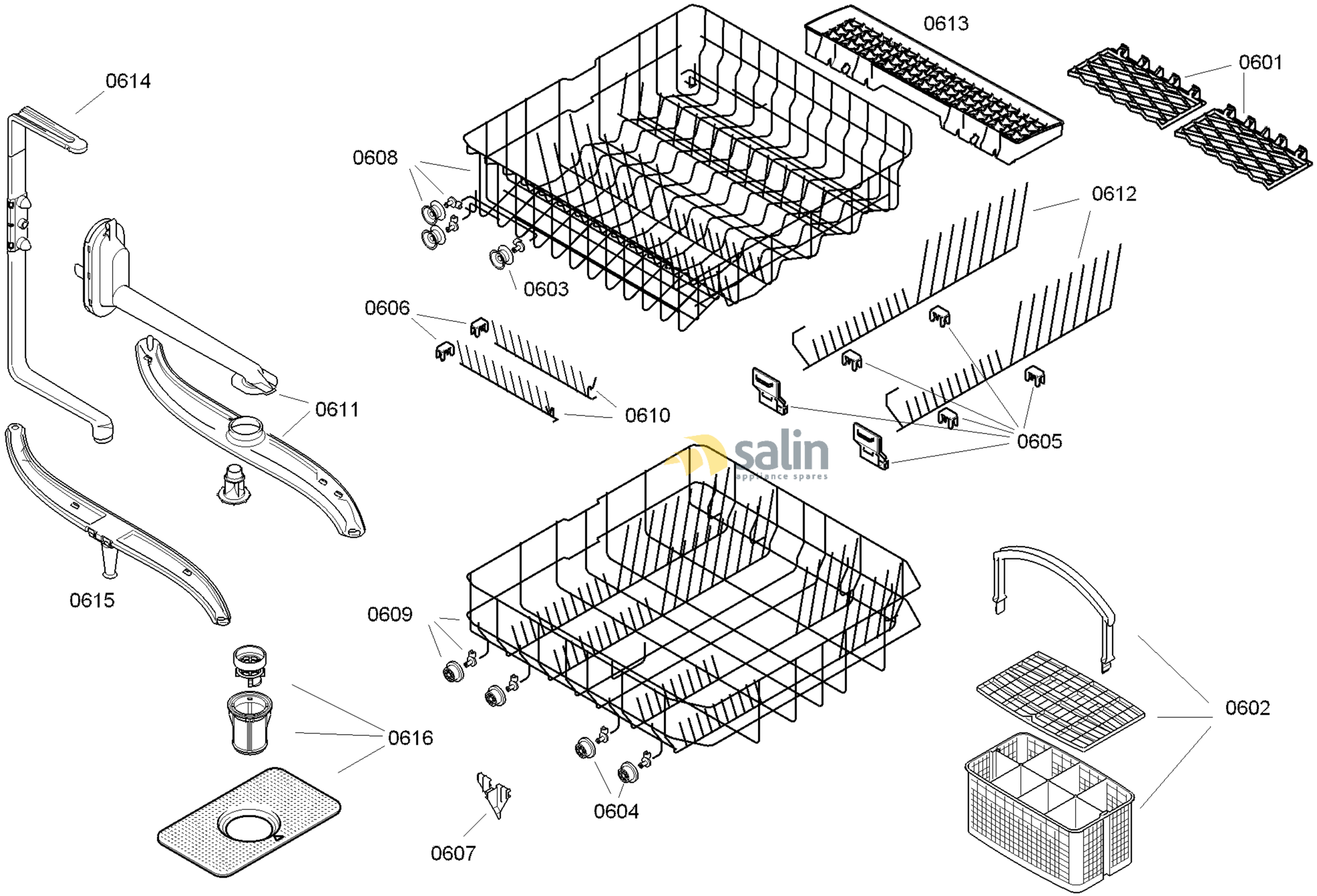

58300000137019 aet 000 c 6/6

FAMILY : SGU84E15
MODEL NO: SGU84E15/23
Check Position No/Part No or Replacement No