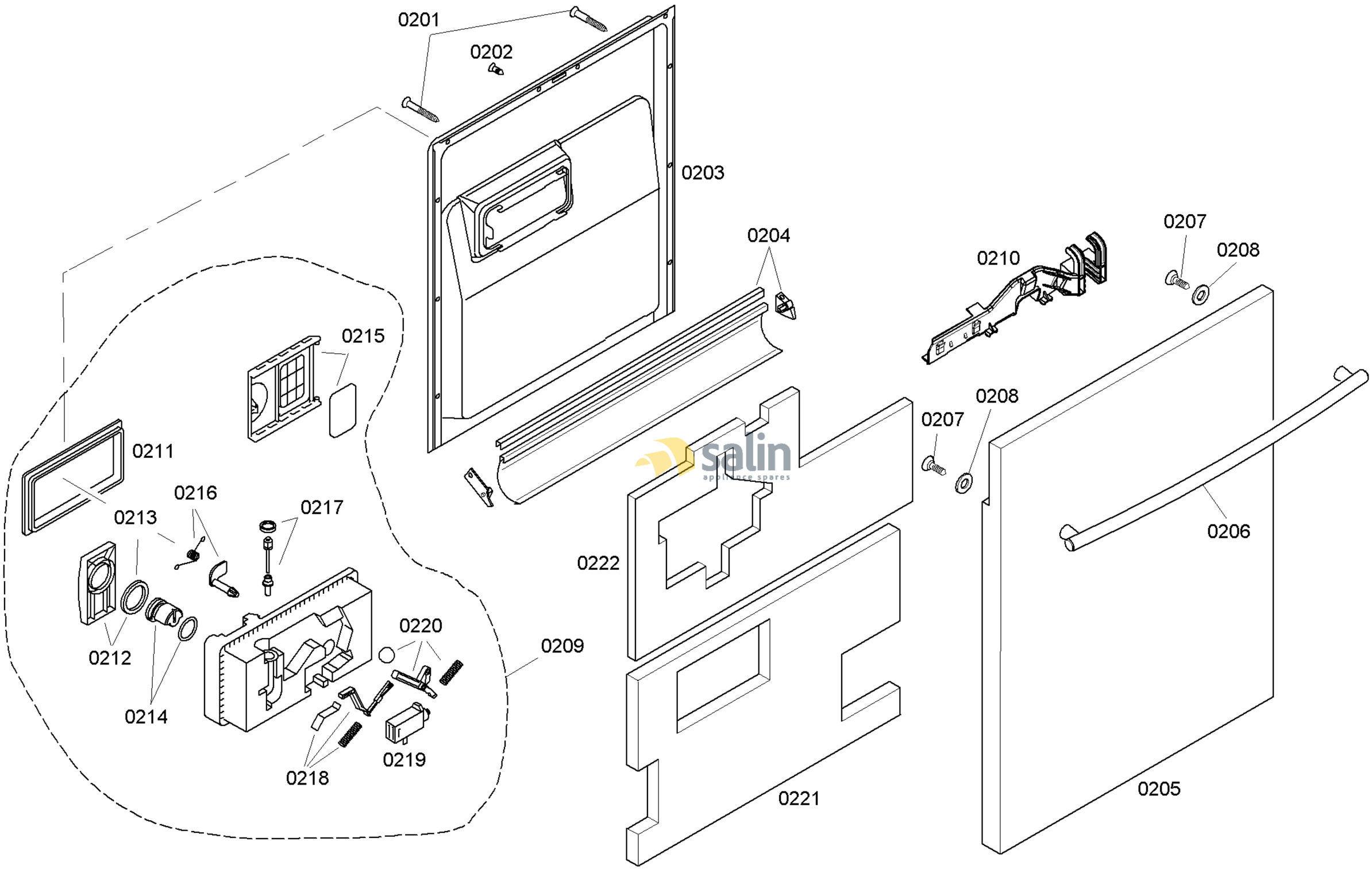

58300000116149 aet 000 c 2/6

FAMILY : SHX46L02UC
MODEL NO: SHX46L02UC/24
Check Position No/Part No or Replacement No

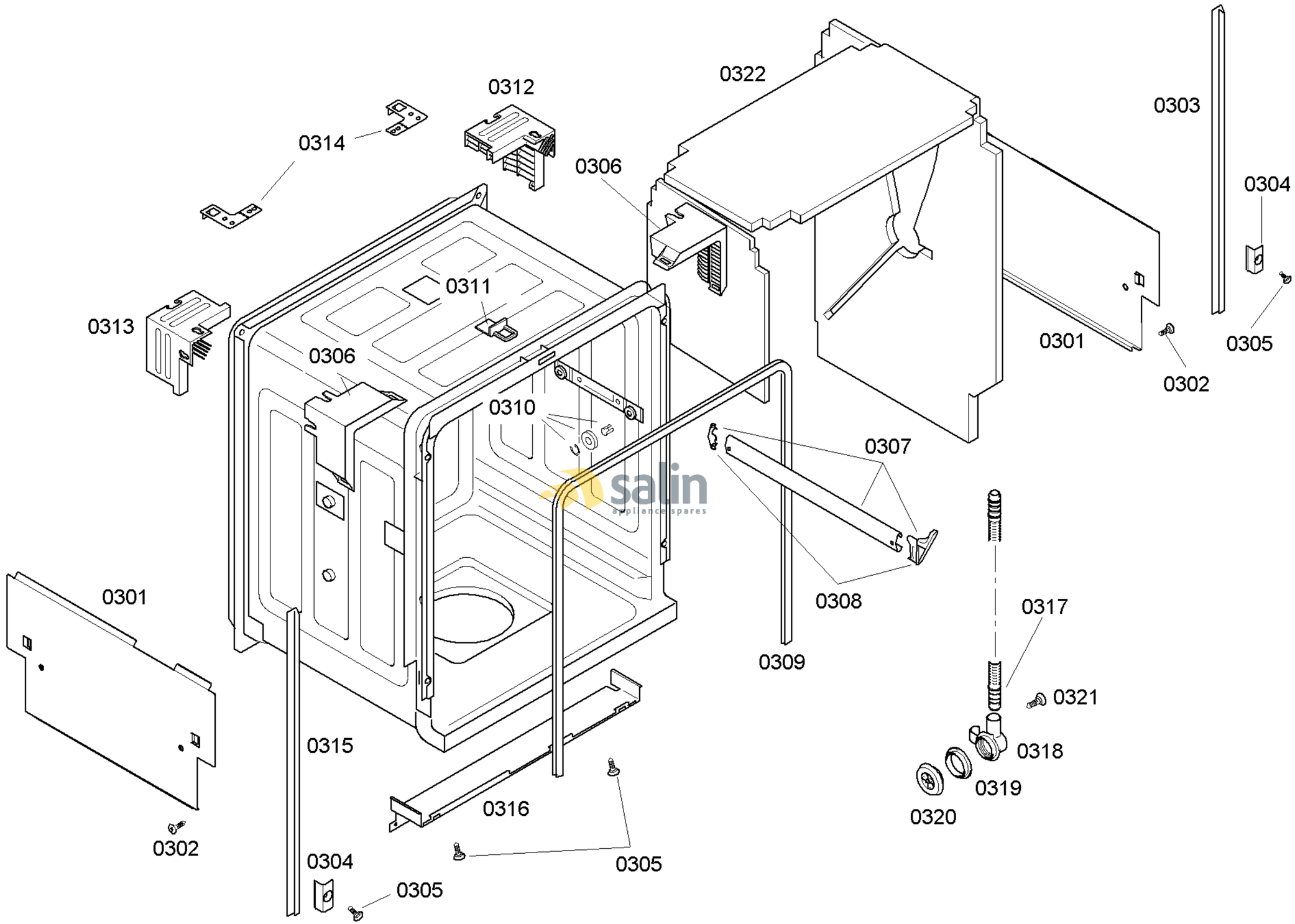

58300000116149 aet 000 c 3/6

FAMILY : SHX46L02UC
MODEL NO: SHX46L02UC/24
Check Position No/Part No or Replacement No

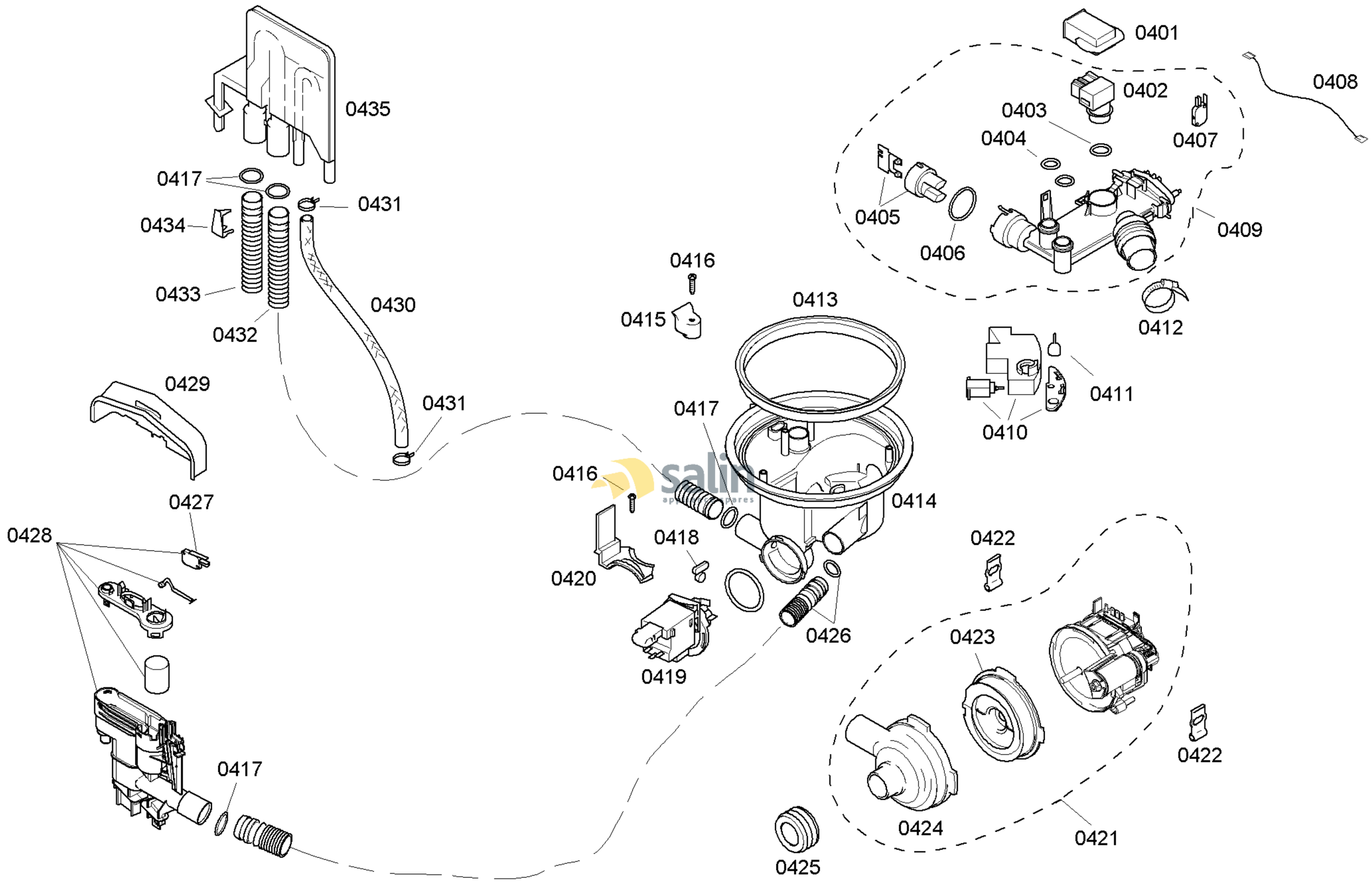

58300000116149 aet 000 c 4/6

FAMILY : SHX46L02UC
MODEL NO: SHX46L02UC/24
Check Position No/Part No or Replacement No

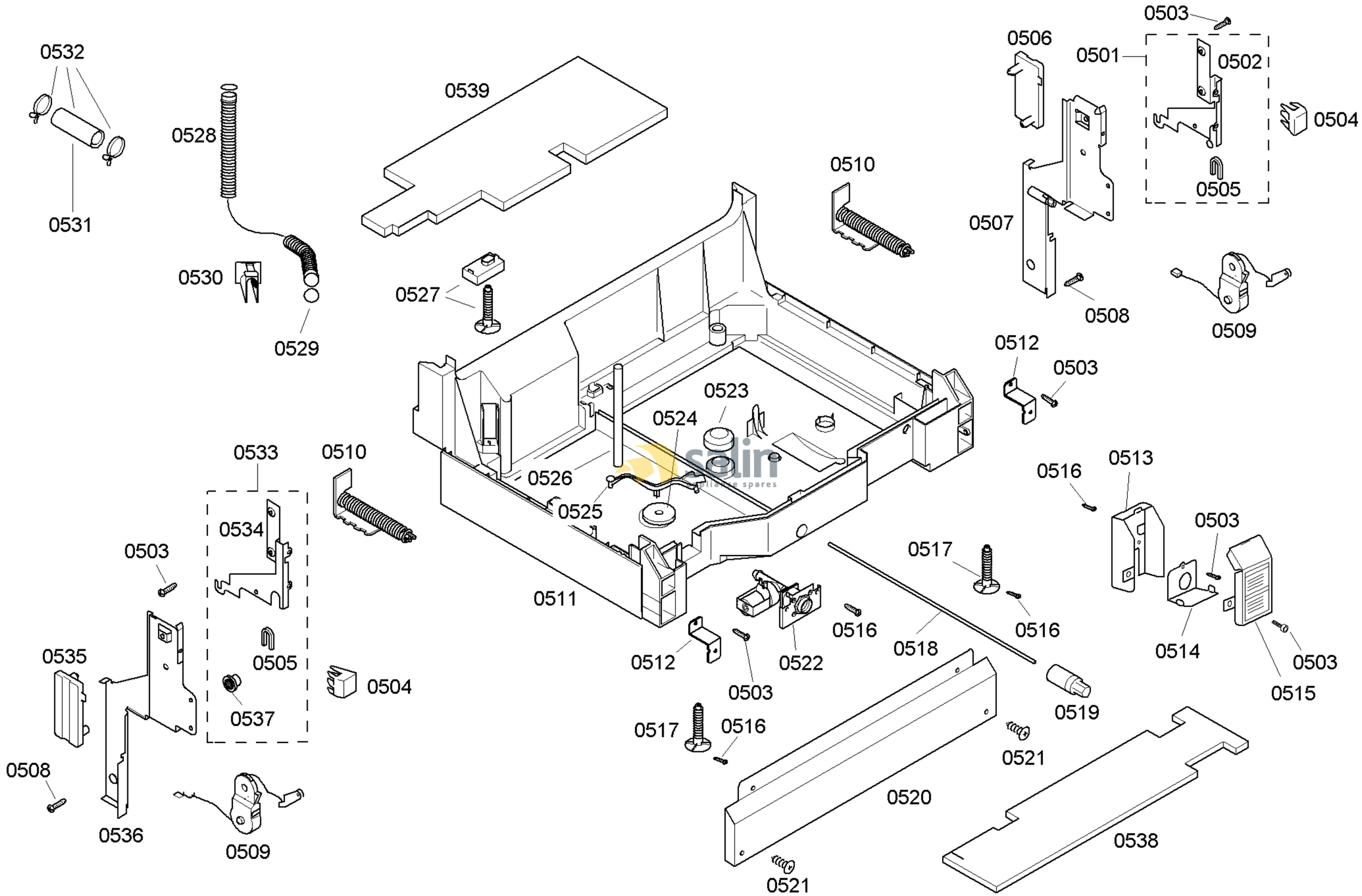

58300000116149 aet 000 c 5/6

FAMILY : SHX46L02UC
MODEL NO: SHX46L02UC/24
Check Position No/Part No or Replacement No

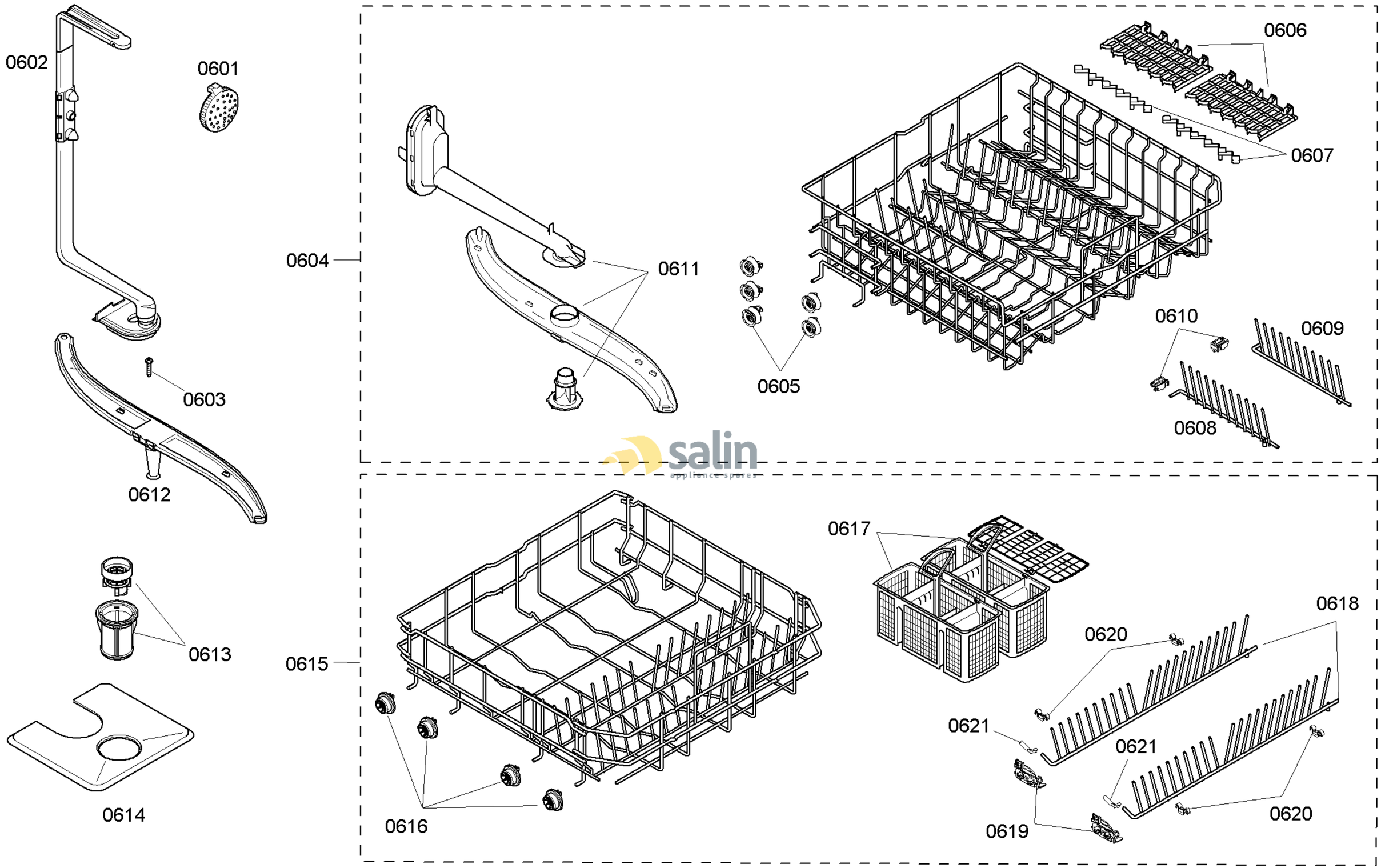

salin
appliance spares

58300000116149 aet 000 c 6/6

FAMILY : SHX46L02UC
MODEL NO: SHX46L02UC/24
Check Position No/Part No or Replacement No