0199

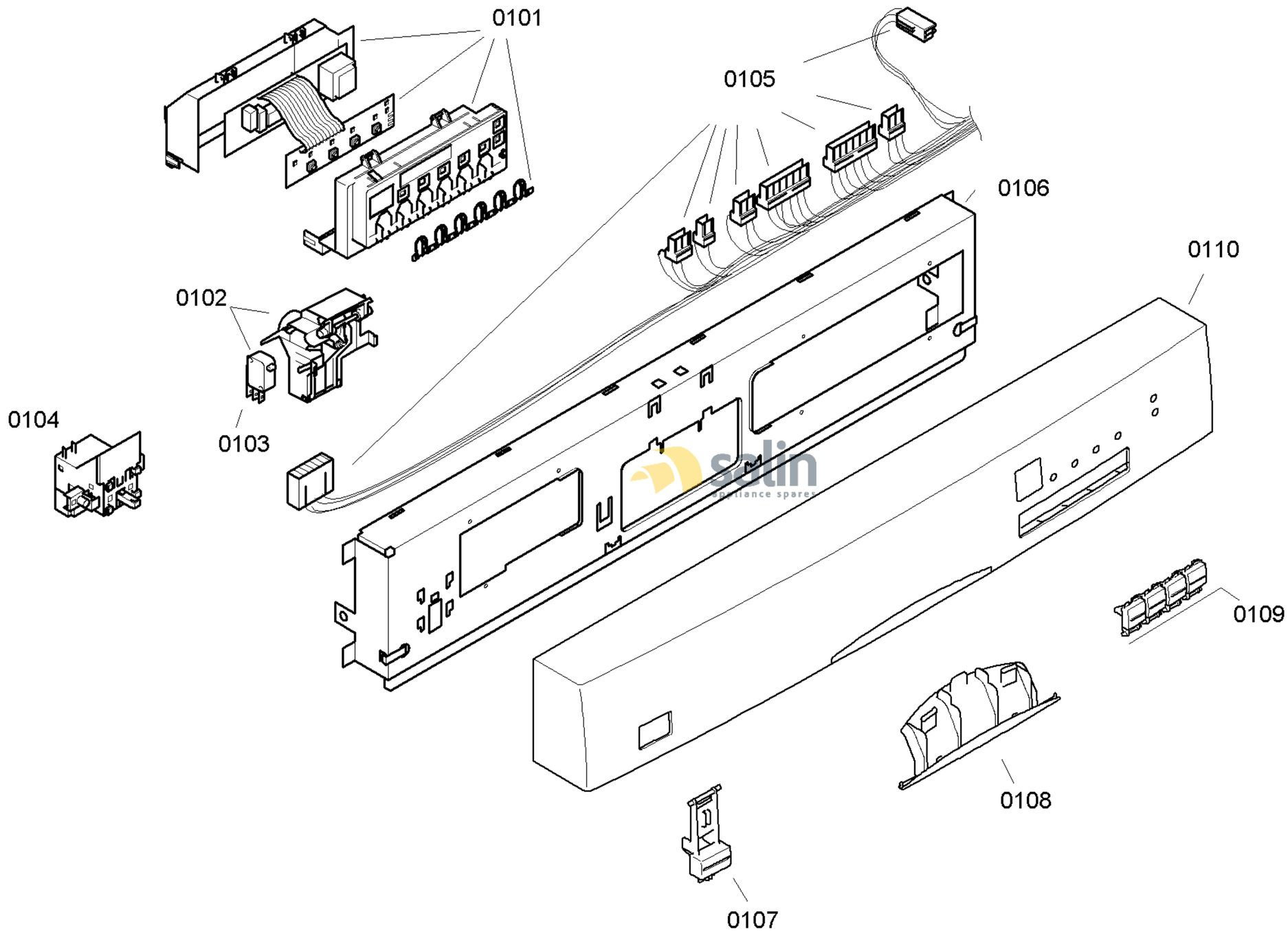

58300000130782 aet 000 b 1/6

FAMILY : SGS46M22EE
MODEL NO: SGS46M22EE/90
Check Position No/Part No or Replacement No

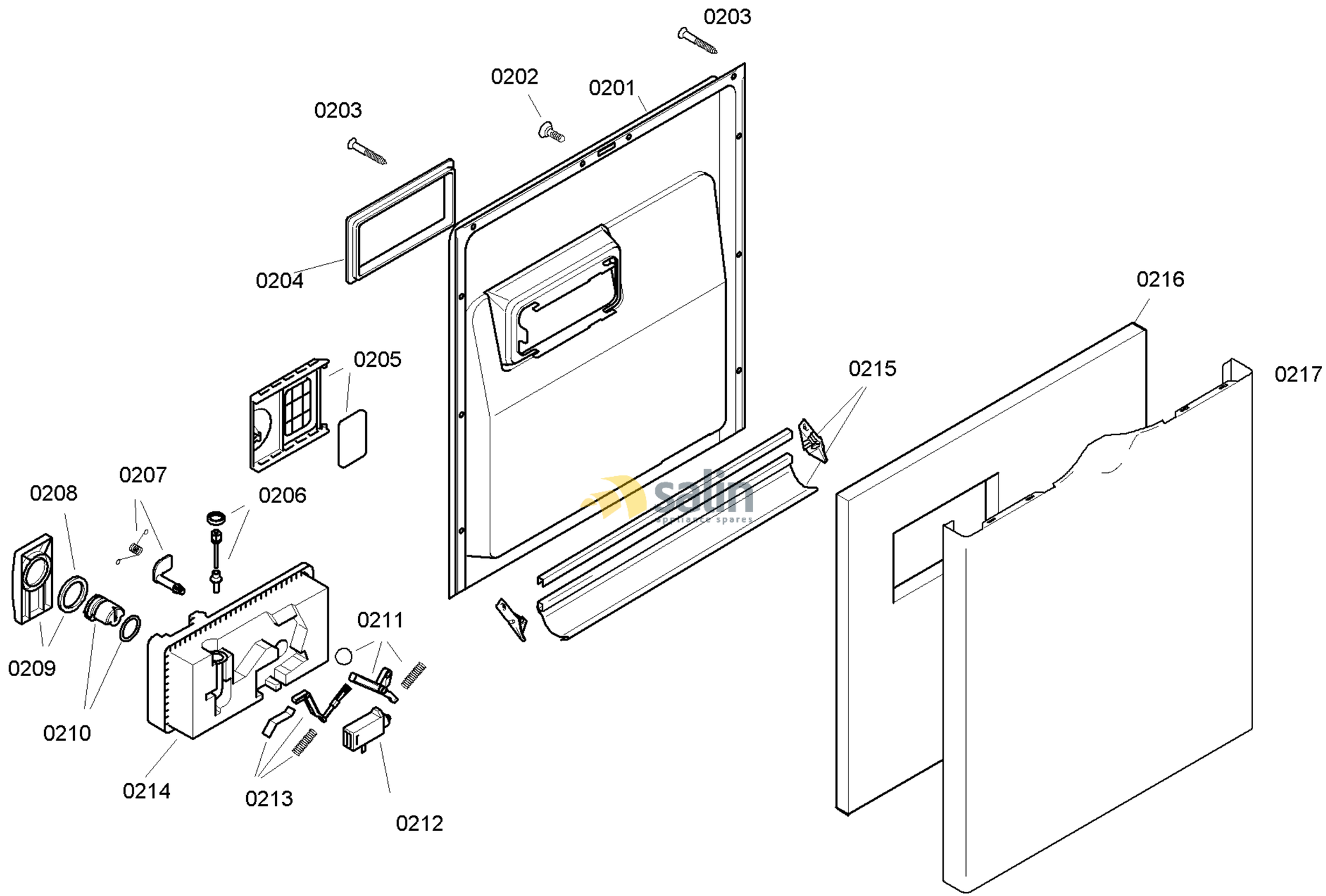

58300000130782 aet 000 b 2/6

FAMILY : SGS46M22EE
MODEL NO: SGS46M22EE/90
Check Position No/Part No or Replacement No

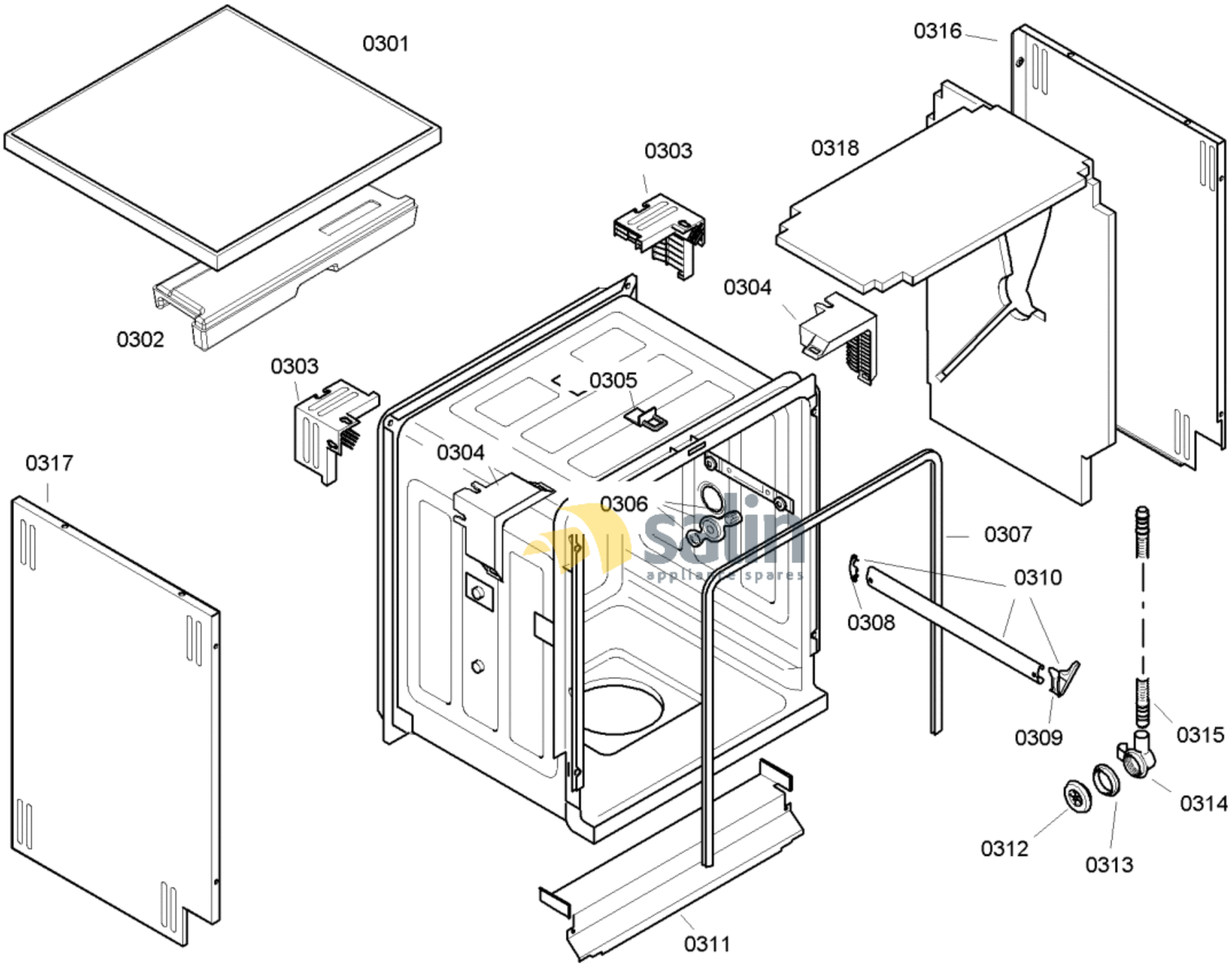

58300000130782 aet 000 b 3/6

FAMILY : SGS46M22EE

MODEL NO: SGS46M22EE/90

Check Position No/Part No or Replacement No

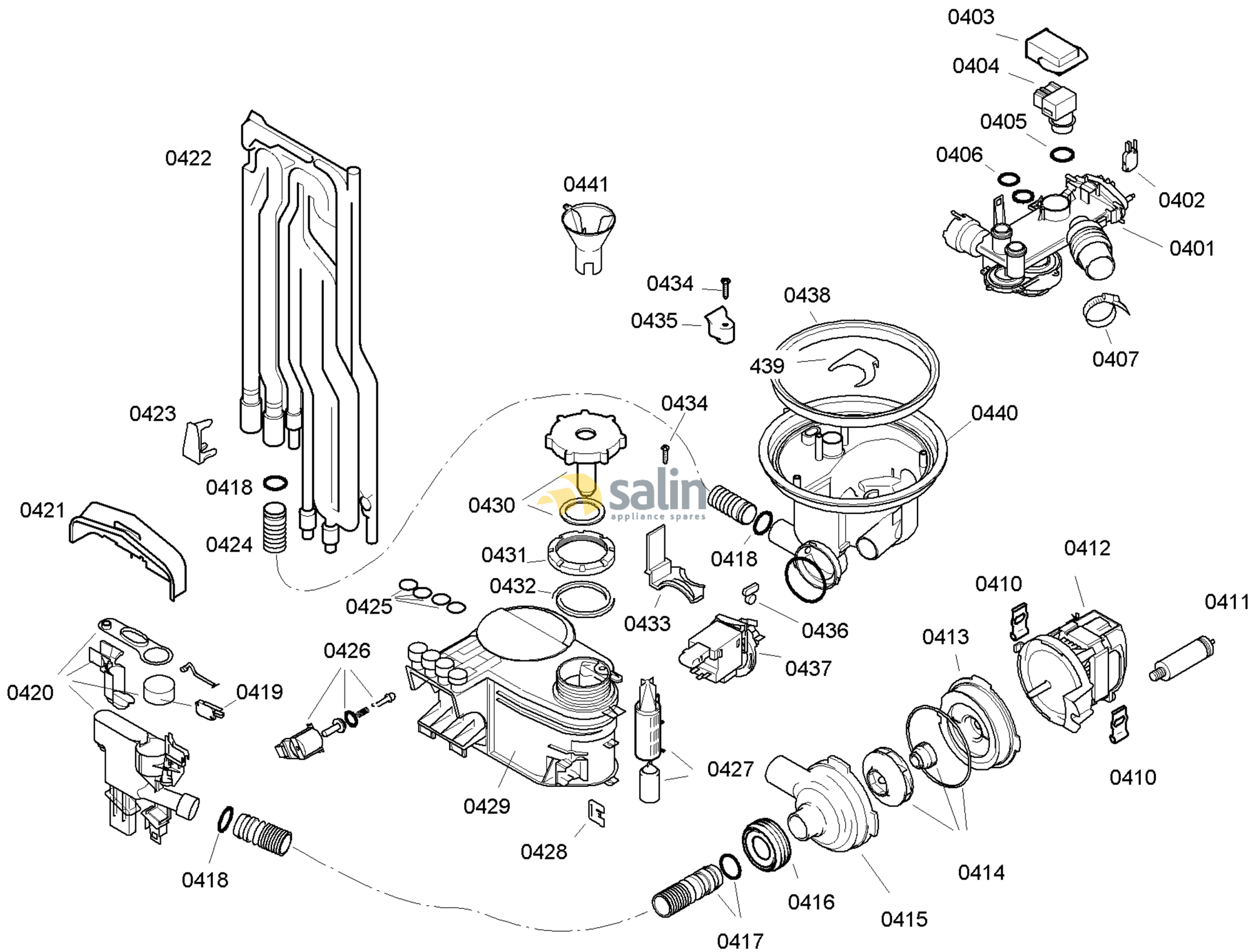

58300000130782 aet 000 b 4/6

FAMILY : SGS46M22EE
MODEL NO: SGS46M22EE/90
Check Position No/Part No or Replacement No

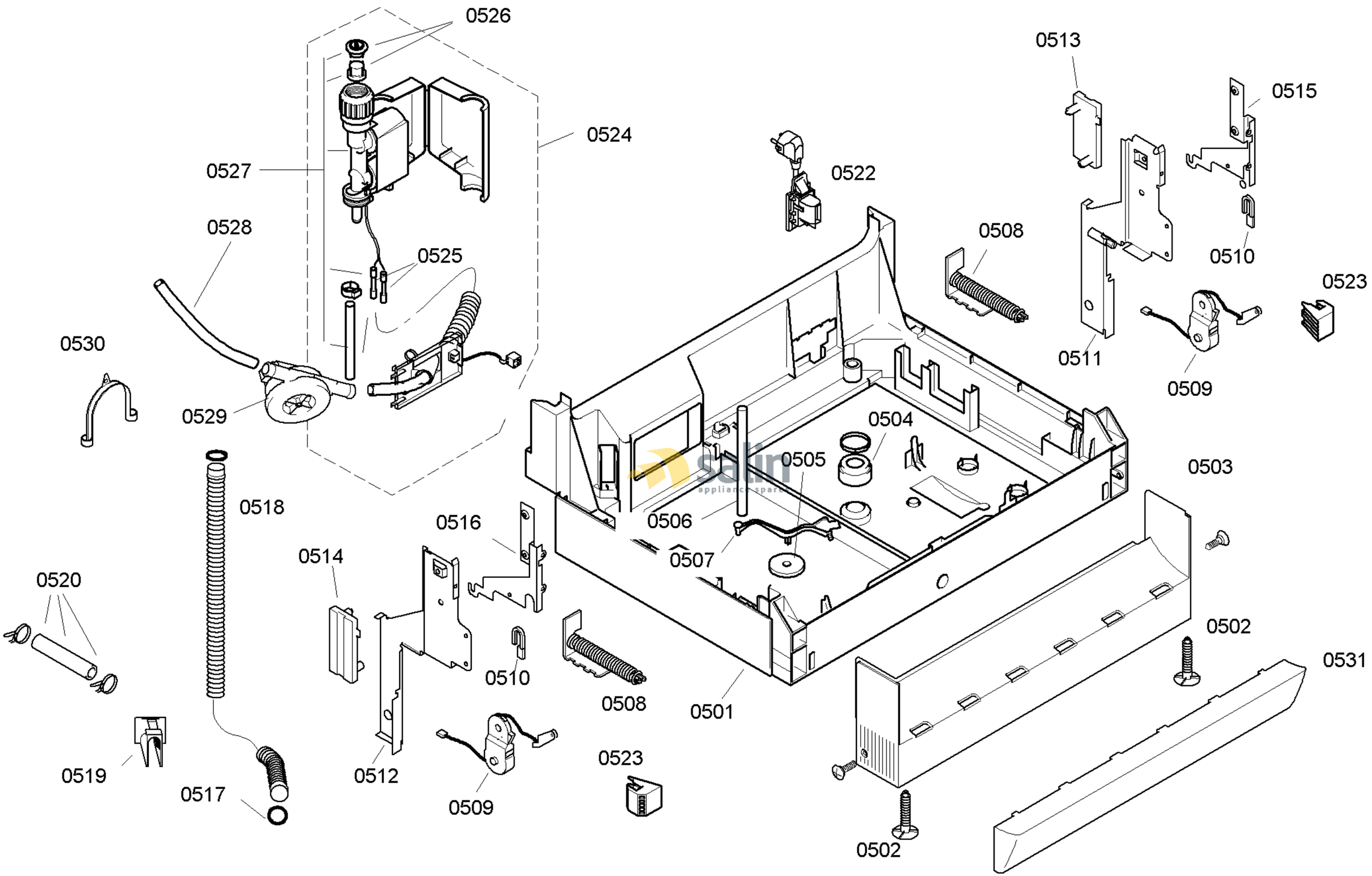

58300000130782 aet 000 b 5/6

FAMILY : SGS46M22EE
MODEL NO: SGS46M22EE/90
Check Position No/Part No or Replacement No

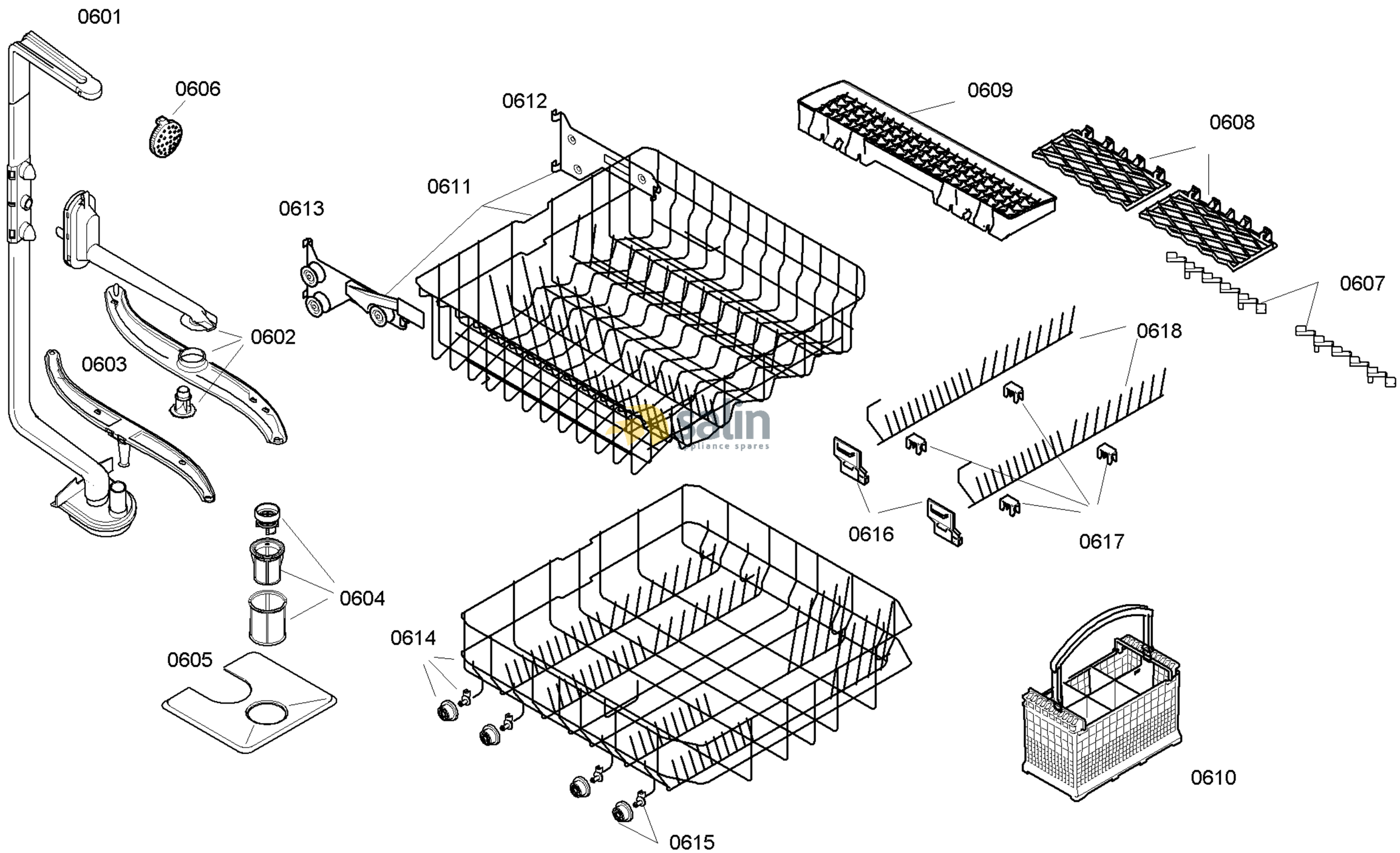

58300000130782 aet 000 b 6/6

FAMILY : SGS46M22EE
MODEL NO: SGS46M22EE/90
Check Position No/Part No or Replacement No