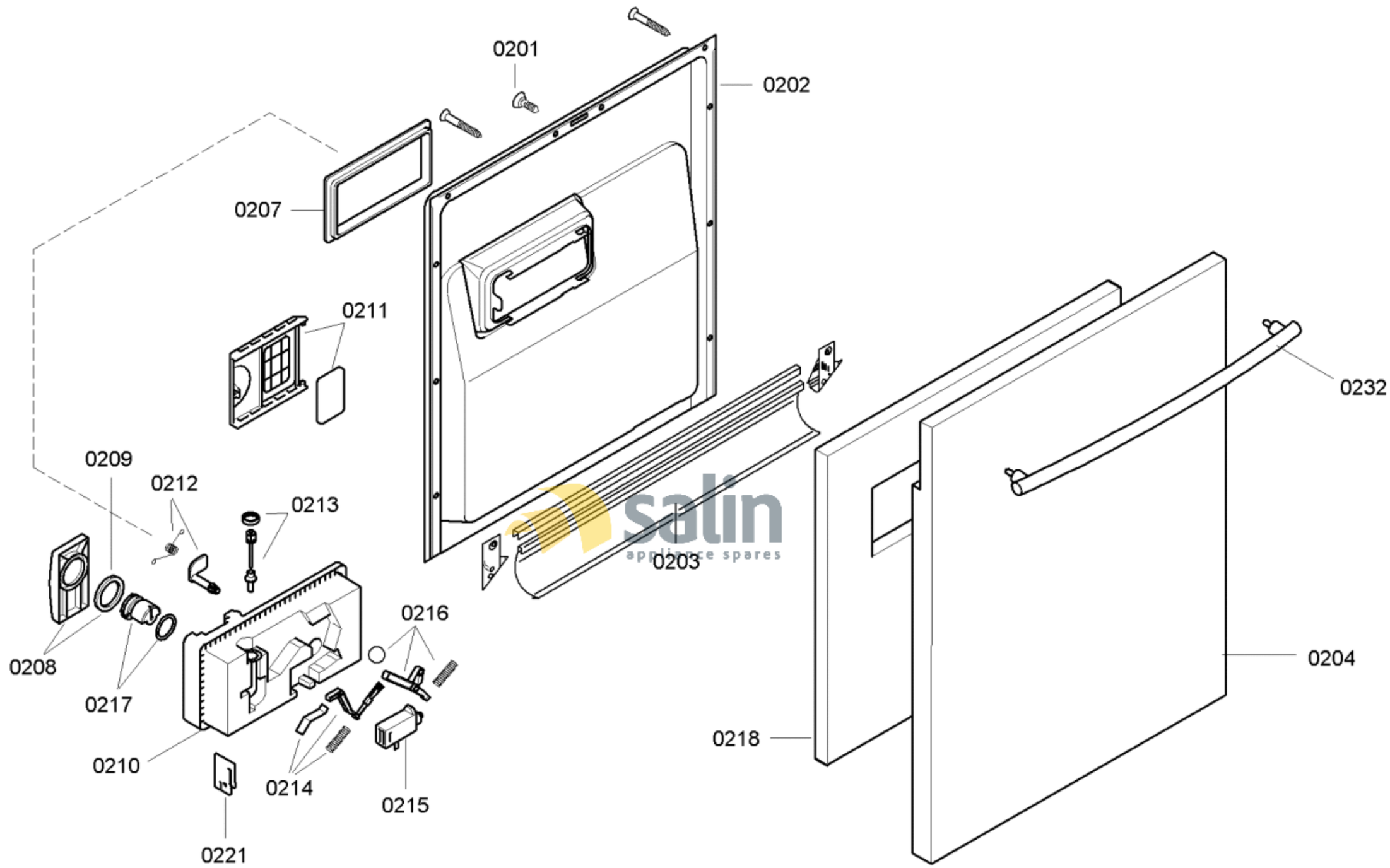

58300000125999 aet 000 f 2/6

FAMILY : SHU8816UC

MODEL NO: SHU8816UC/14

Check Position No/Part No or Replacement No

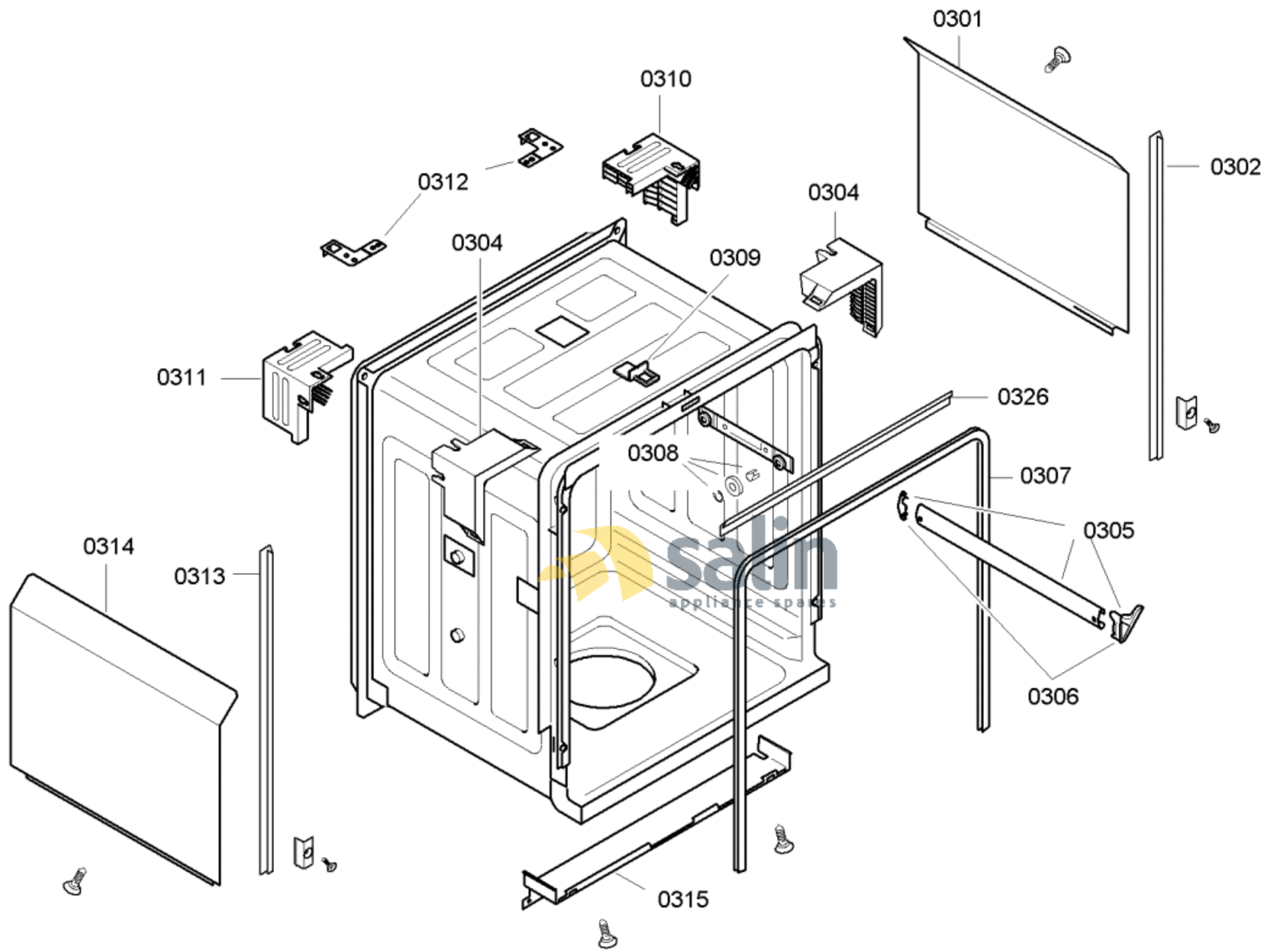

58300000125999 aet 000 f 3/6

FAMILY : SHU8816UC

MODEL NO: SHU8816UC/14

Check Position No/Part No or Replacement No

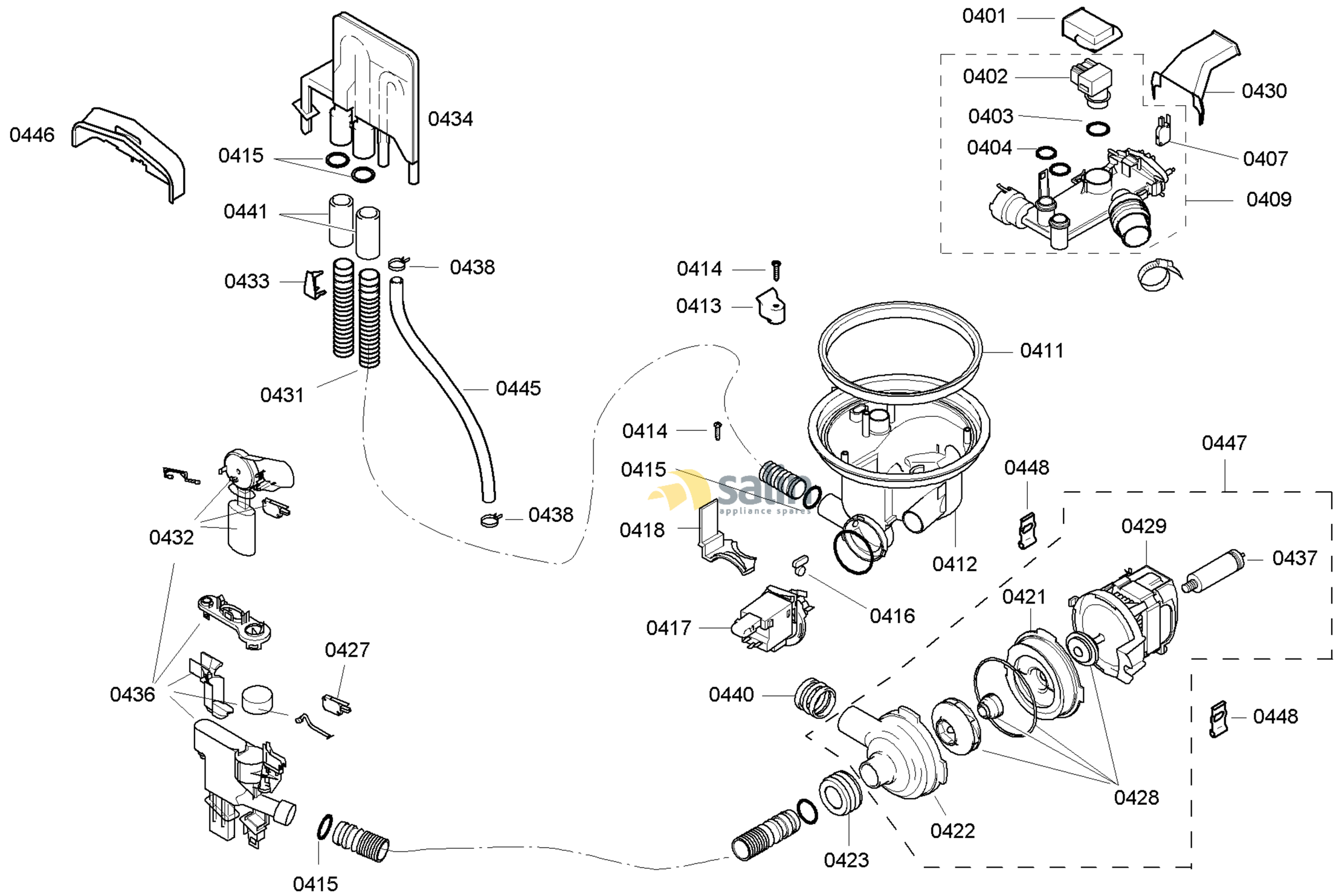

58300000125999 aet 000 f 4/6

FAMILY : SHU8816UC
MODEL NO: SHU8816UC/14
Check Position No/Part No or Replacement No

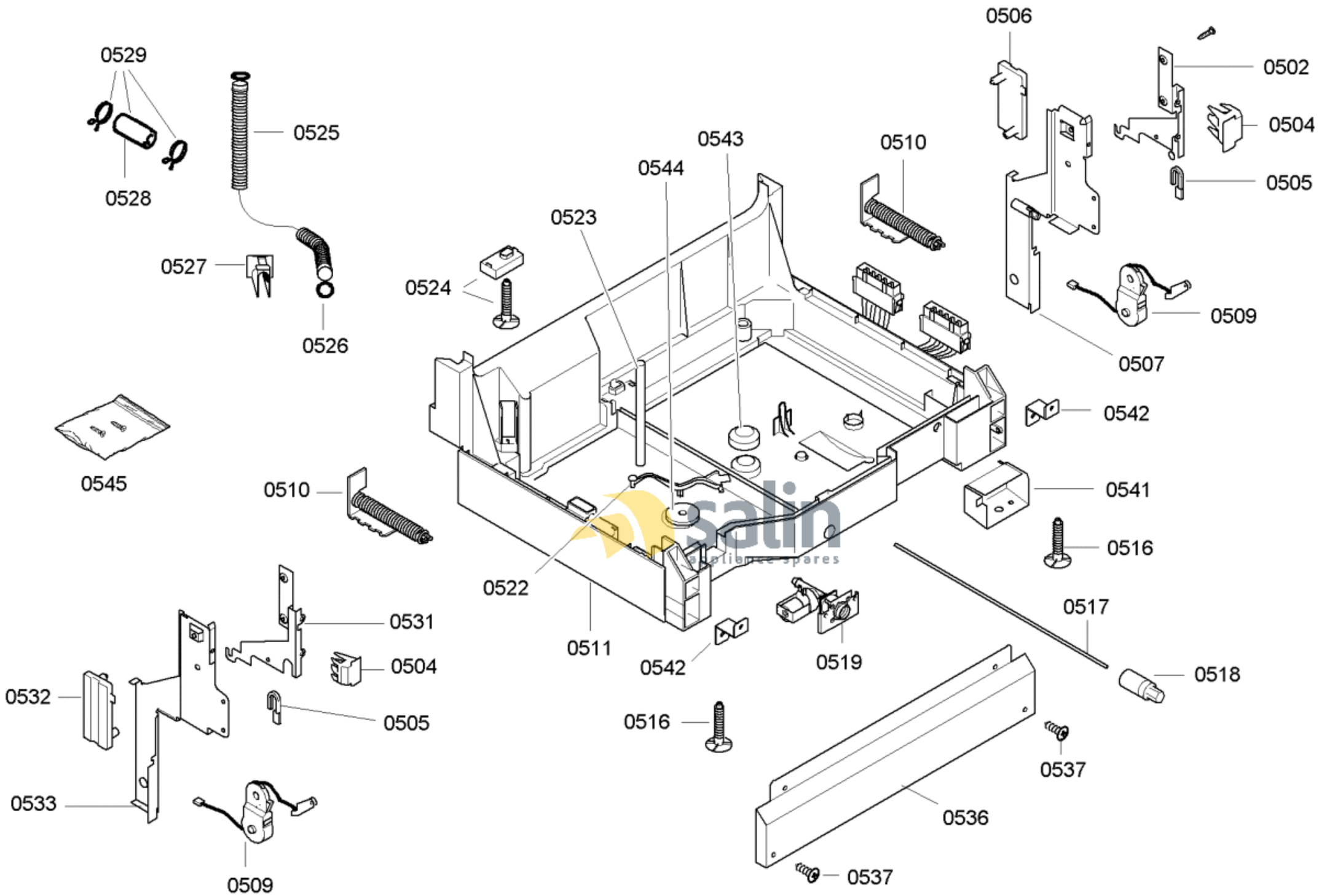

58300000125999 aet 000 f 5/6

FAMILY : SHU8816UC

MODEL NO: SHU8816UC/14

Check Position No/Part No or Replacement No

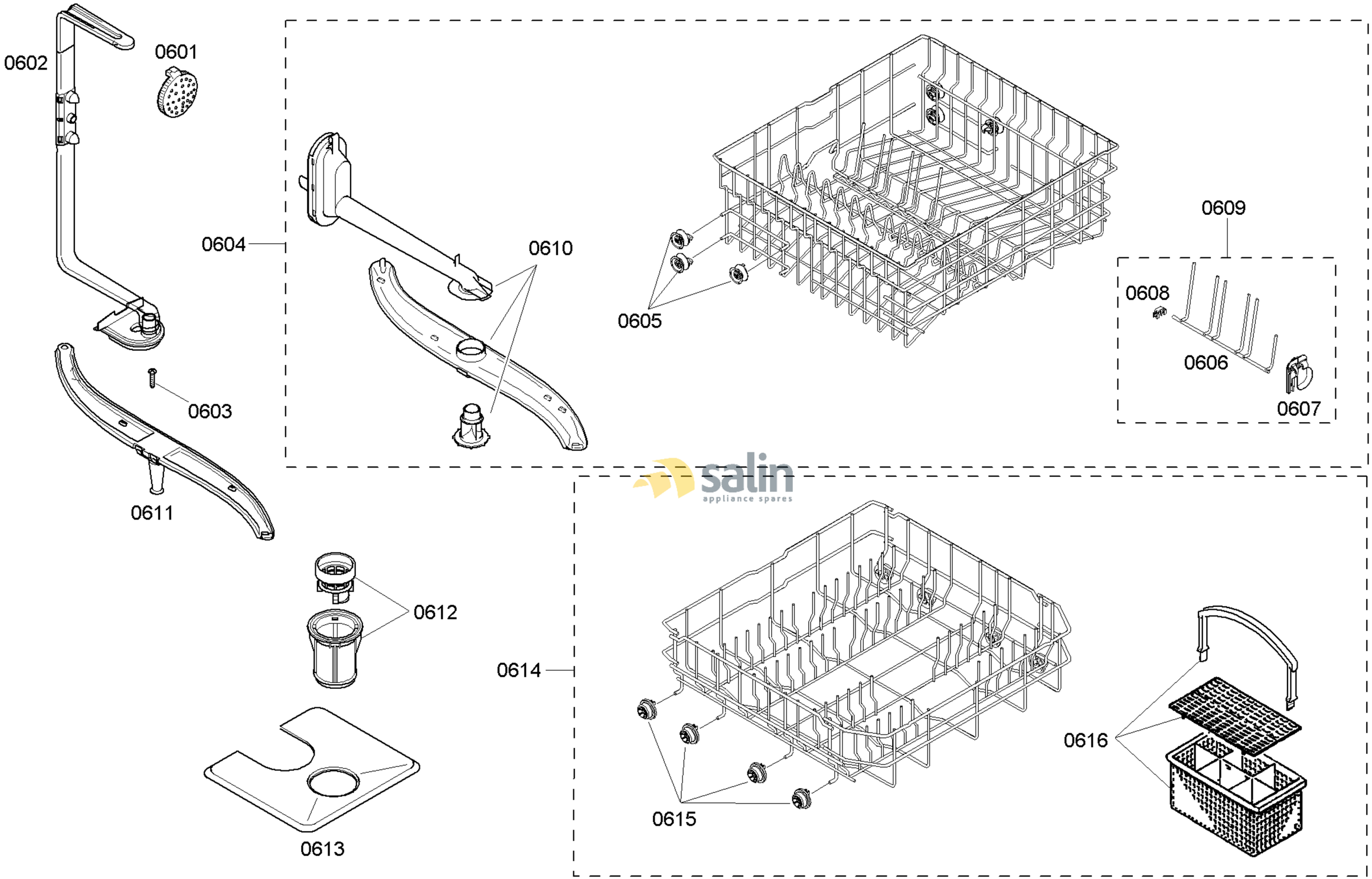

58300000125999 aet 000 f 6/6

FAMILY : SHU8816UC
MODEL NO: SHU8816UC/14
Check Position No/Part No or Replacement No