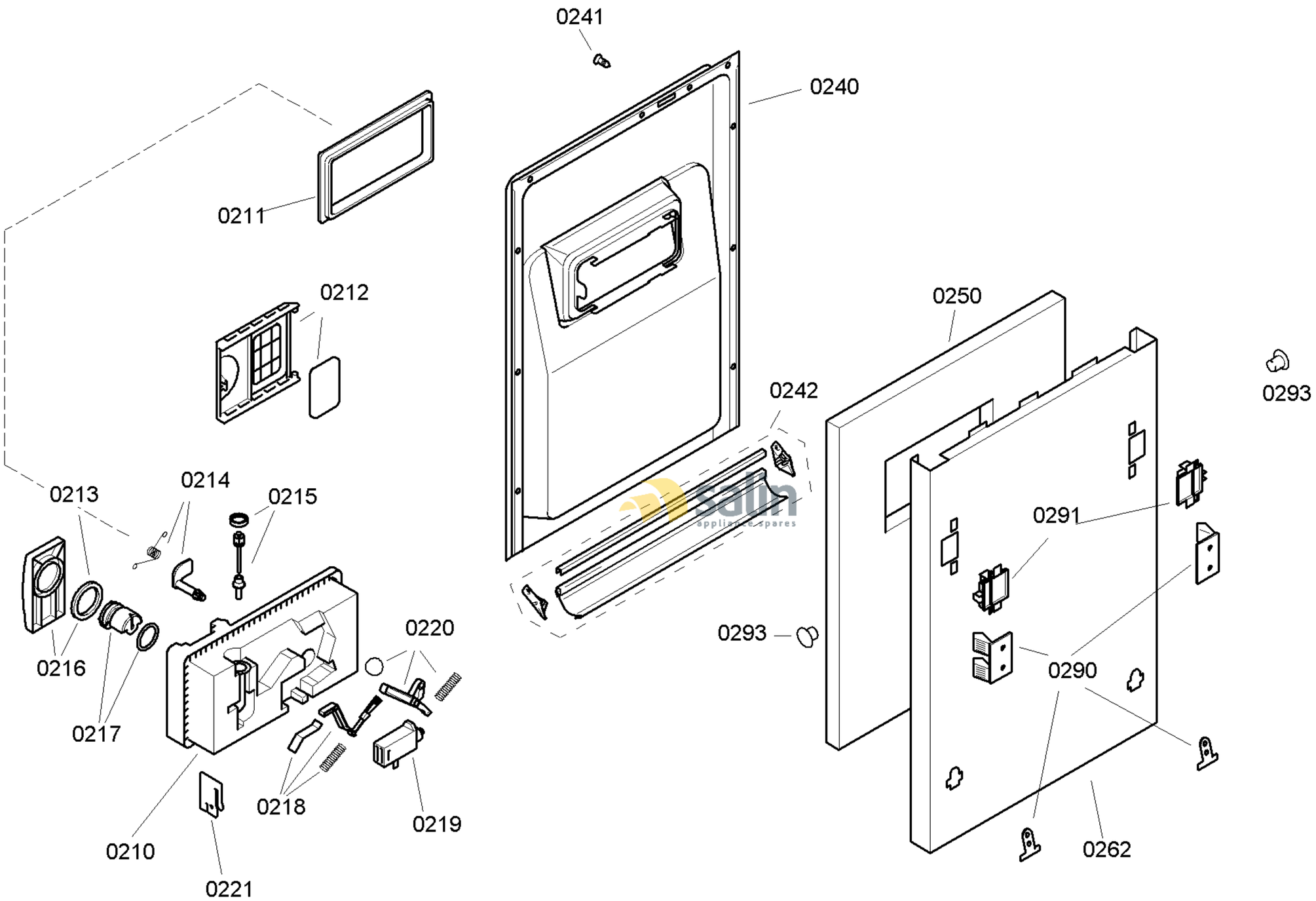

58300000111411 aet 000 c 2/6

FAMILY : SRI53M02EU
MODEL NO: SRI53M02EU/27
Check Position No/Part No or Replacement No

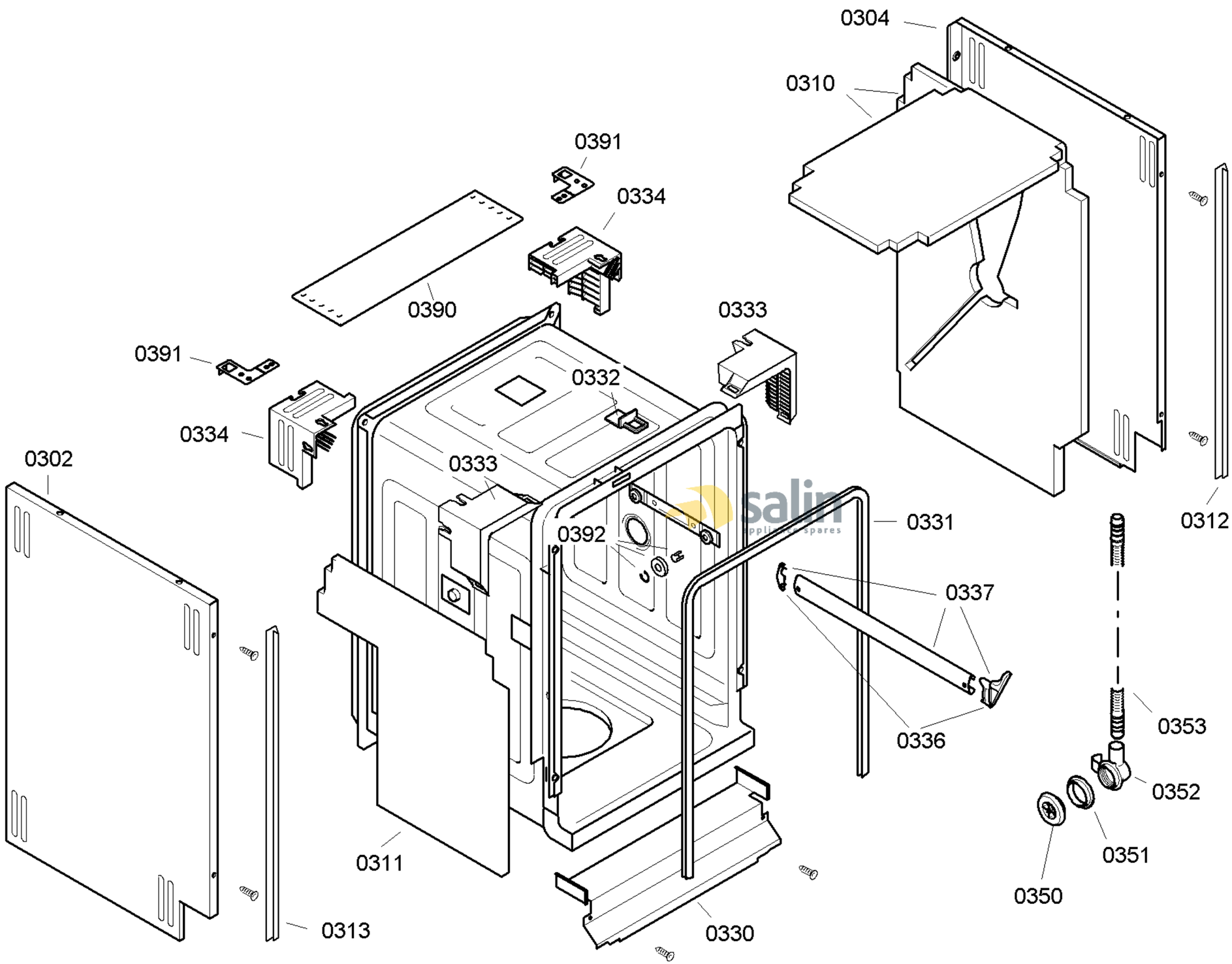

58300000111411 aet 000 c 3/6

FAMILY : SRI53M02EU
MODEL NO: SRI53M02EU/27
Check Position No/Part No or Replacement No

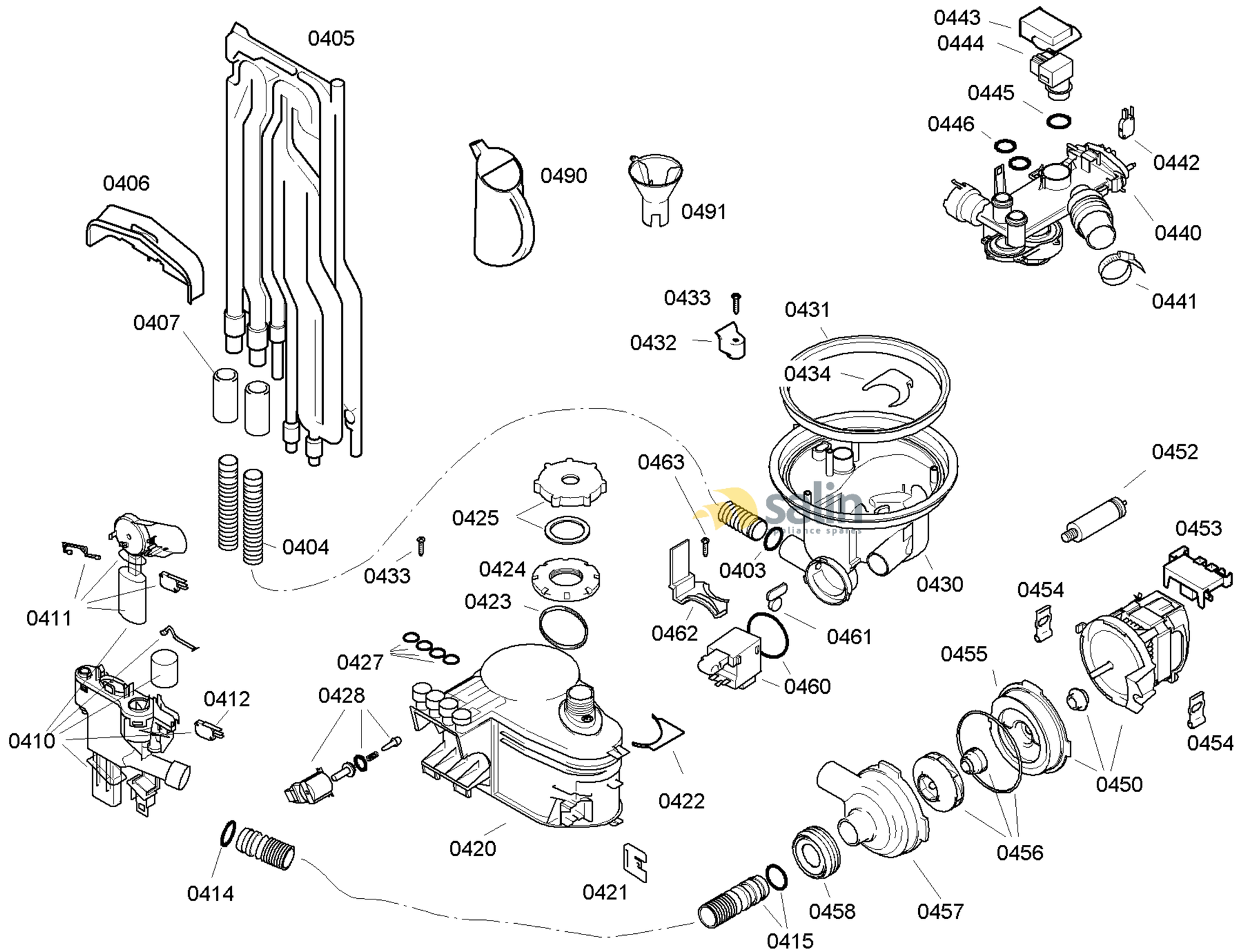

58300000111411 aet 000 c 4/6

FAMILY : SRI53M02EU
MODEL NO: SRI53M02EU/27
Check Position No/Part No or Replacement No

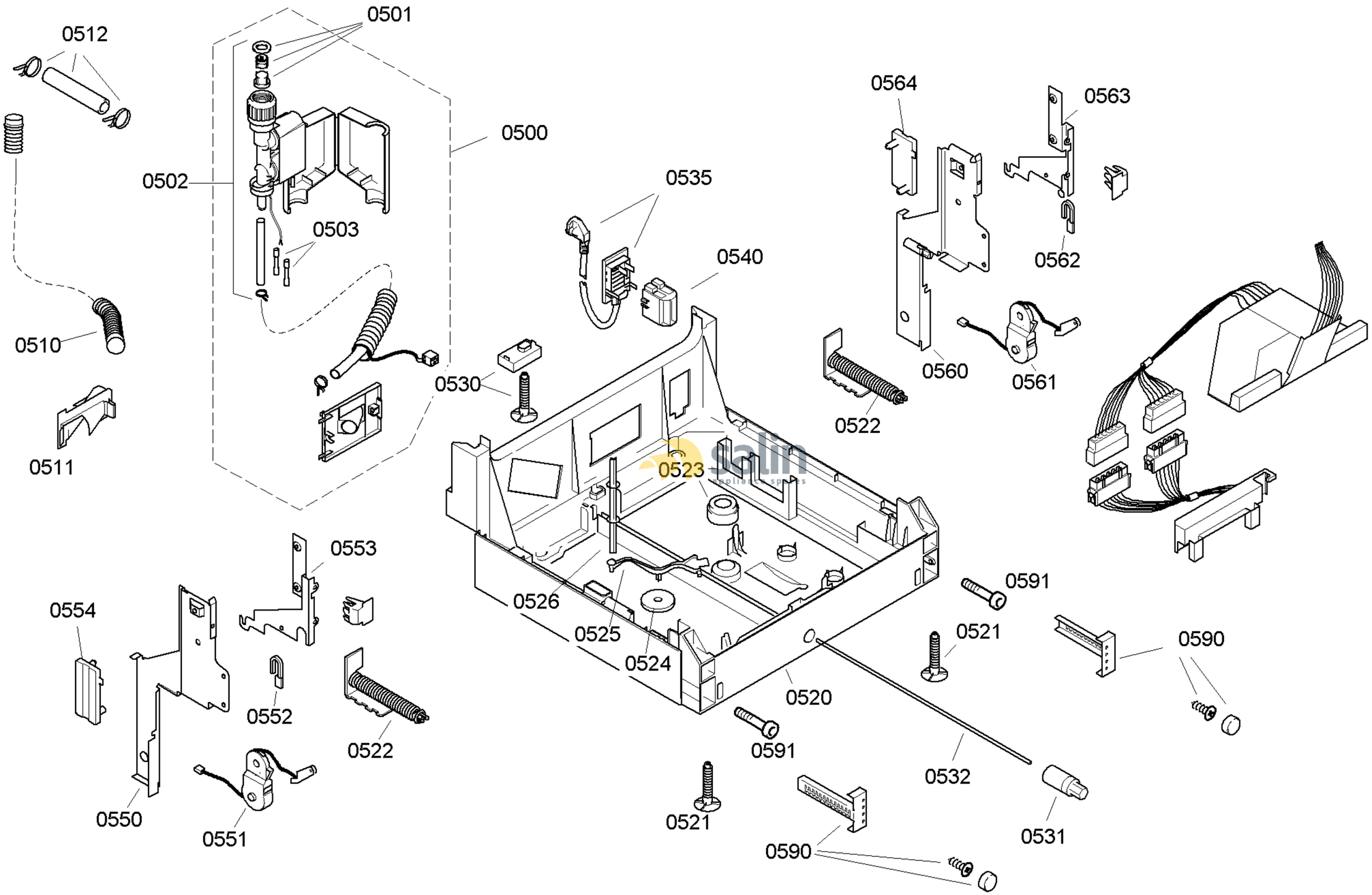

58300000111411 aet 000 c 5/6

FAMILY : SRI53M02EU
MODEL NO: SRI53M02EU/27
Check Position No/Part No or Replacement No

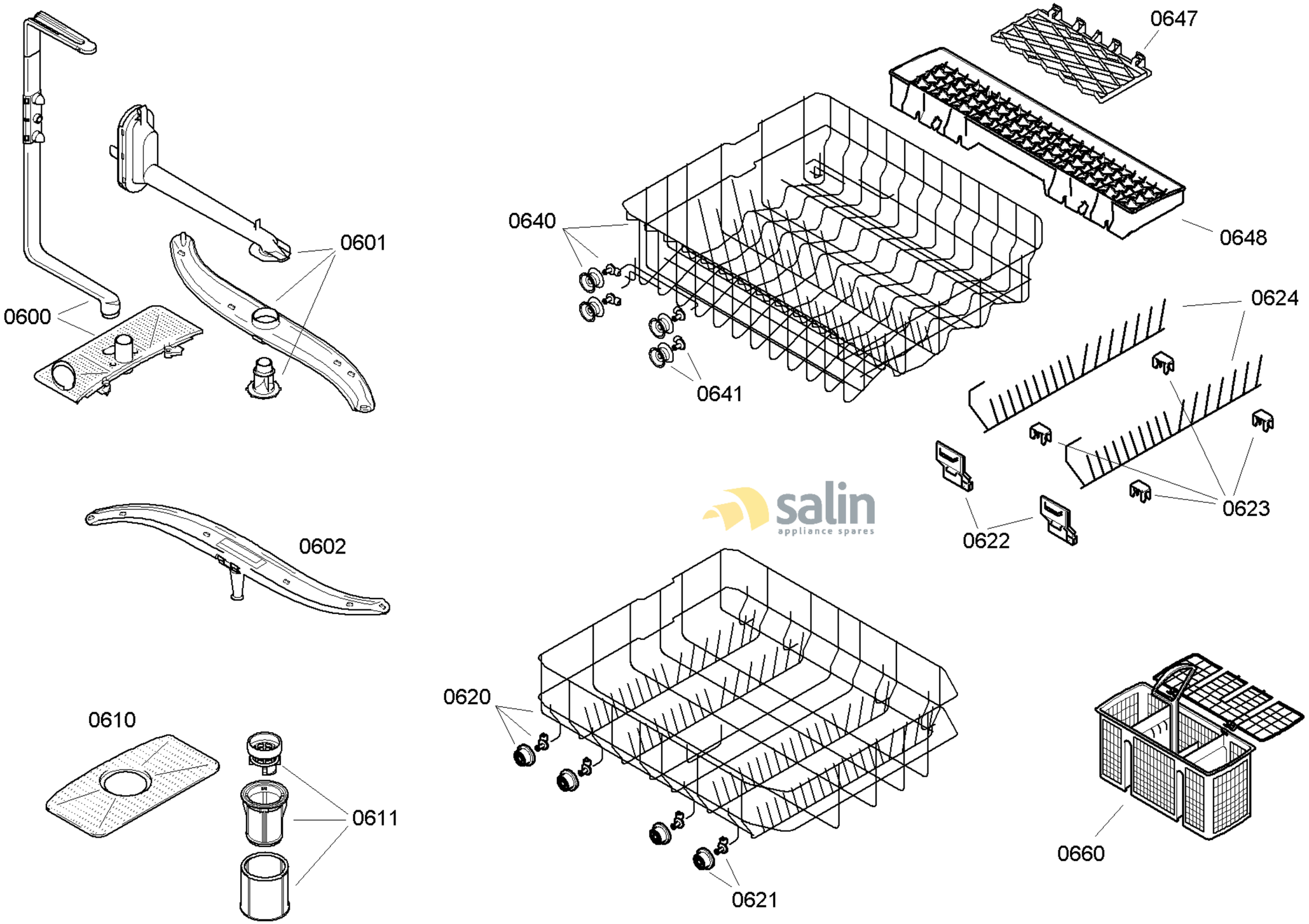

58300000111411 aet 000 c 6/6

FAMILY : SRI53M02EU
MODEL NO: SRI53M02EU/27
Check Position No/Part No or Replacement No