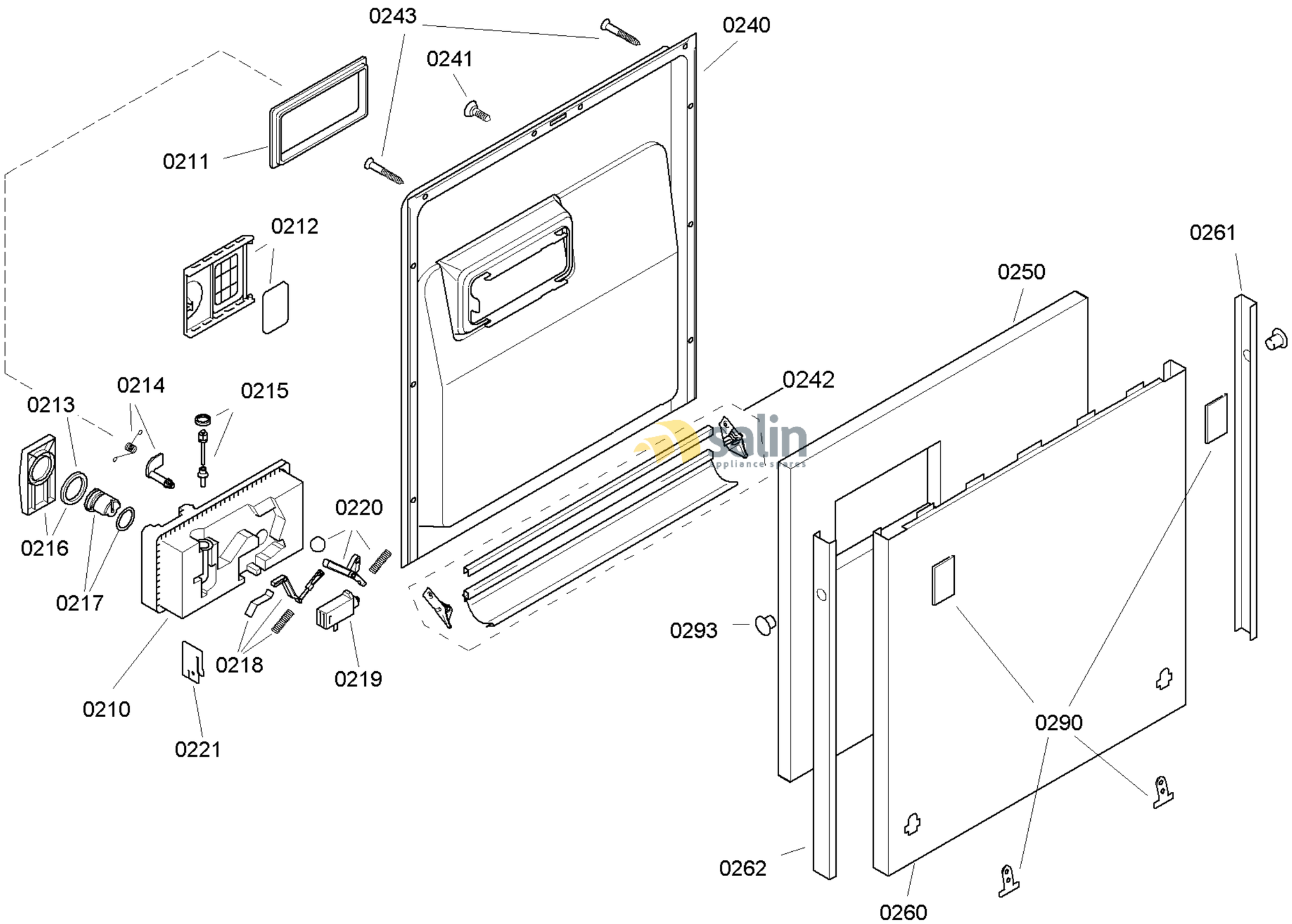


58300000135040 aet 000 a 2/6

FAMILY : SHV46M63EU
MODEL NO: SHV46M63EU/93
Check Position No/Part No or Replacement No

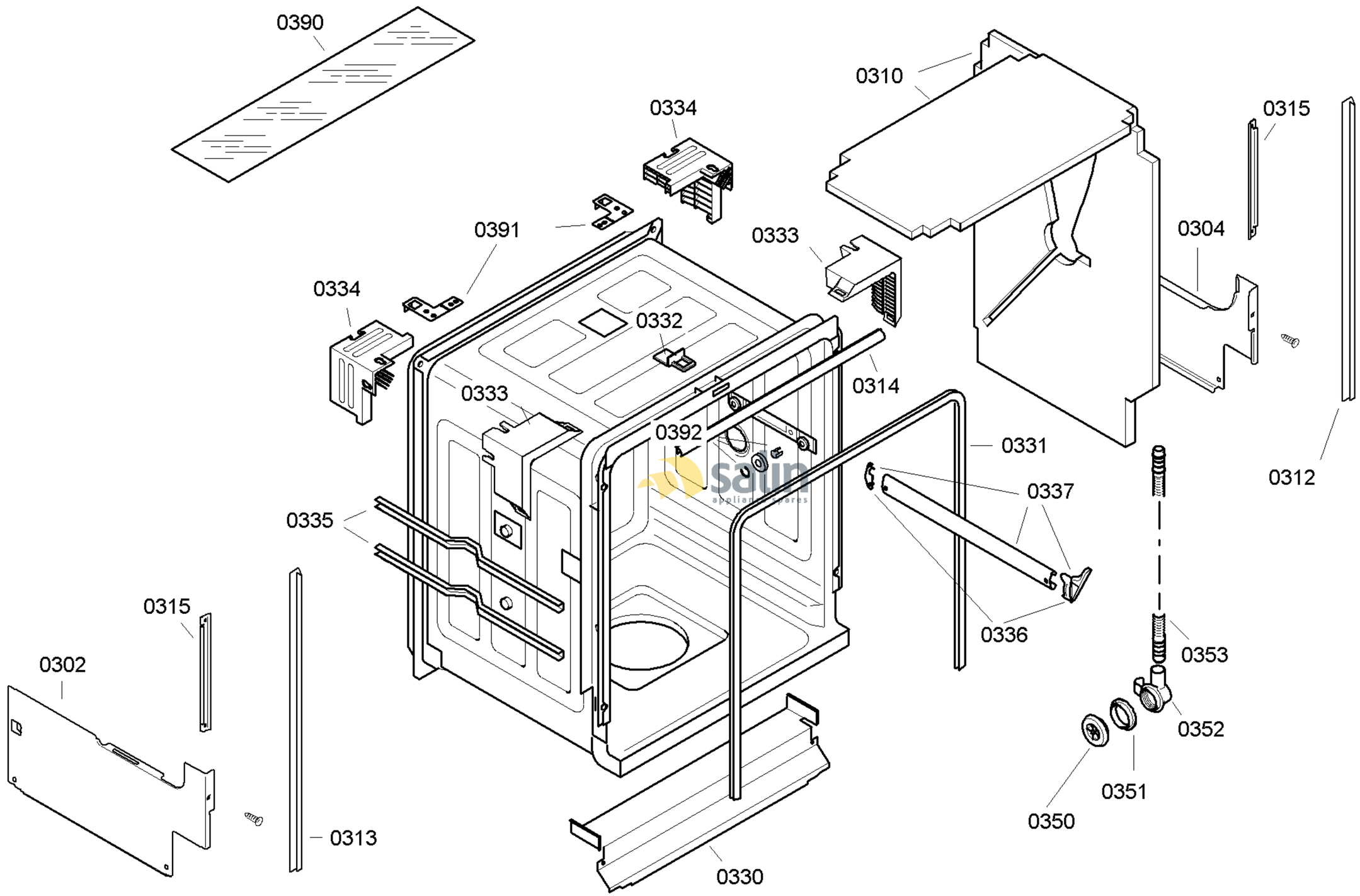


58300000135040 aet 000 a 3/6

FAMILY : SHV46M63EU
MODEL NO: SHV46M63EU/93
Check Position No/Part No or Replacement No

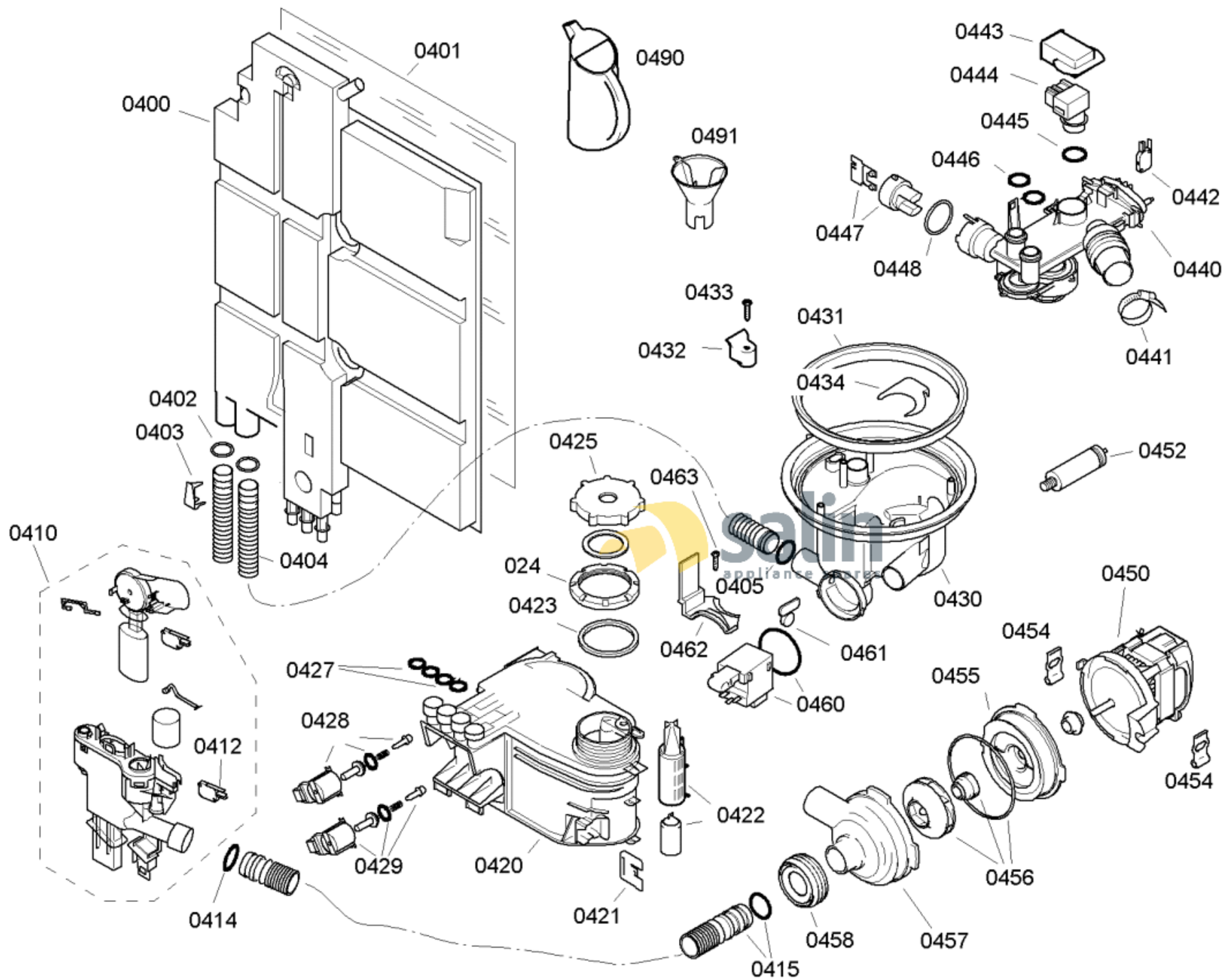


58300000135040 aet 000 a 4/6

FAMILY : SHV46M63EU

MODEL NO: SHV46M63EU/93

Check Position No/Part No or Replacement No

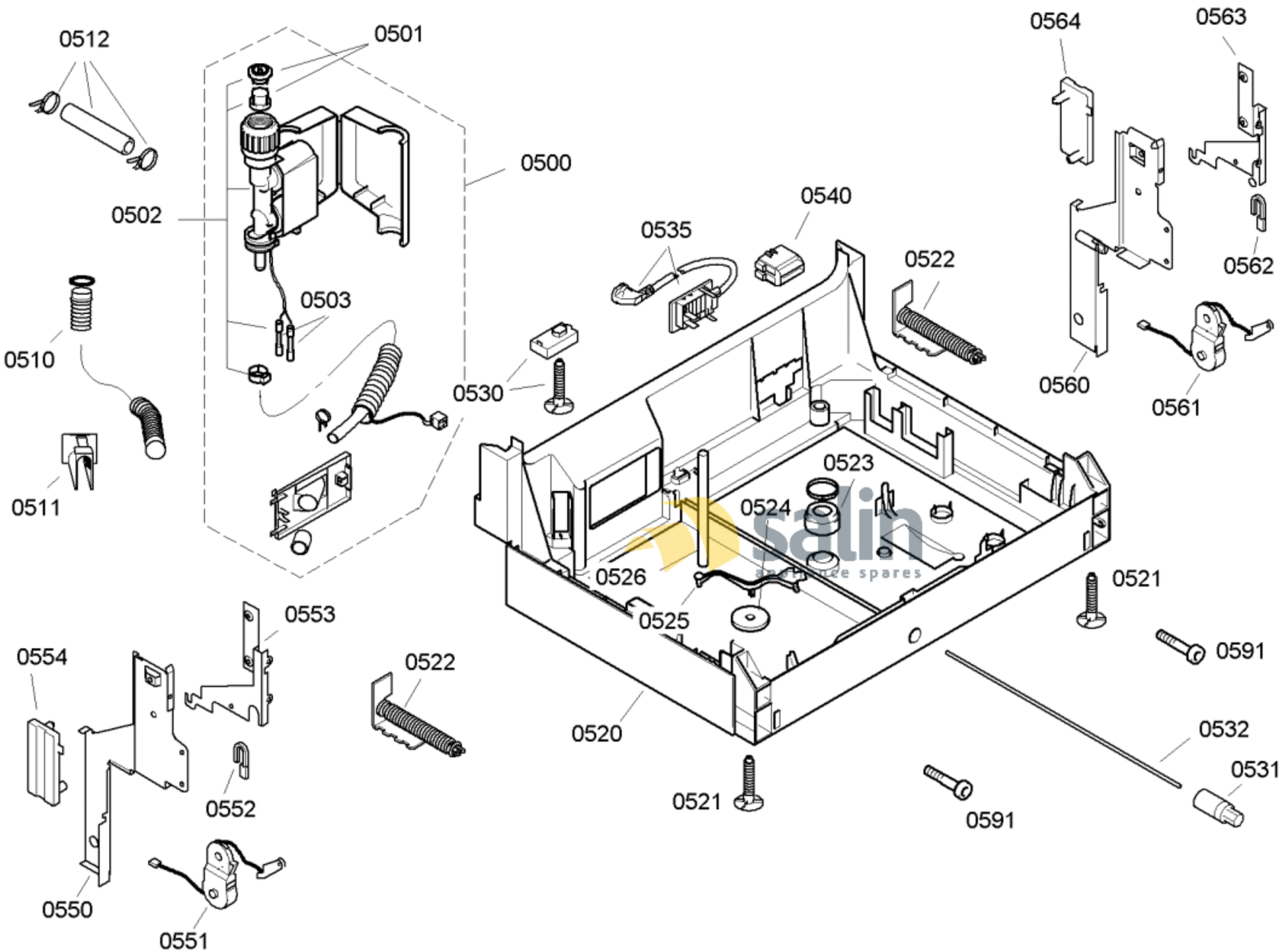


58300000135040 aet 000 a 5/6

FAMILY : SHV46M63EU

MODEL NO: SHV46M63EU/93

Check Position No/Part No or Replacement No

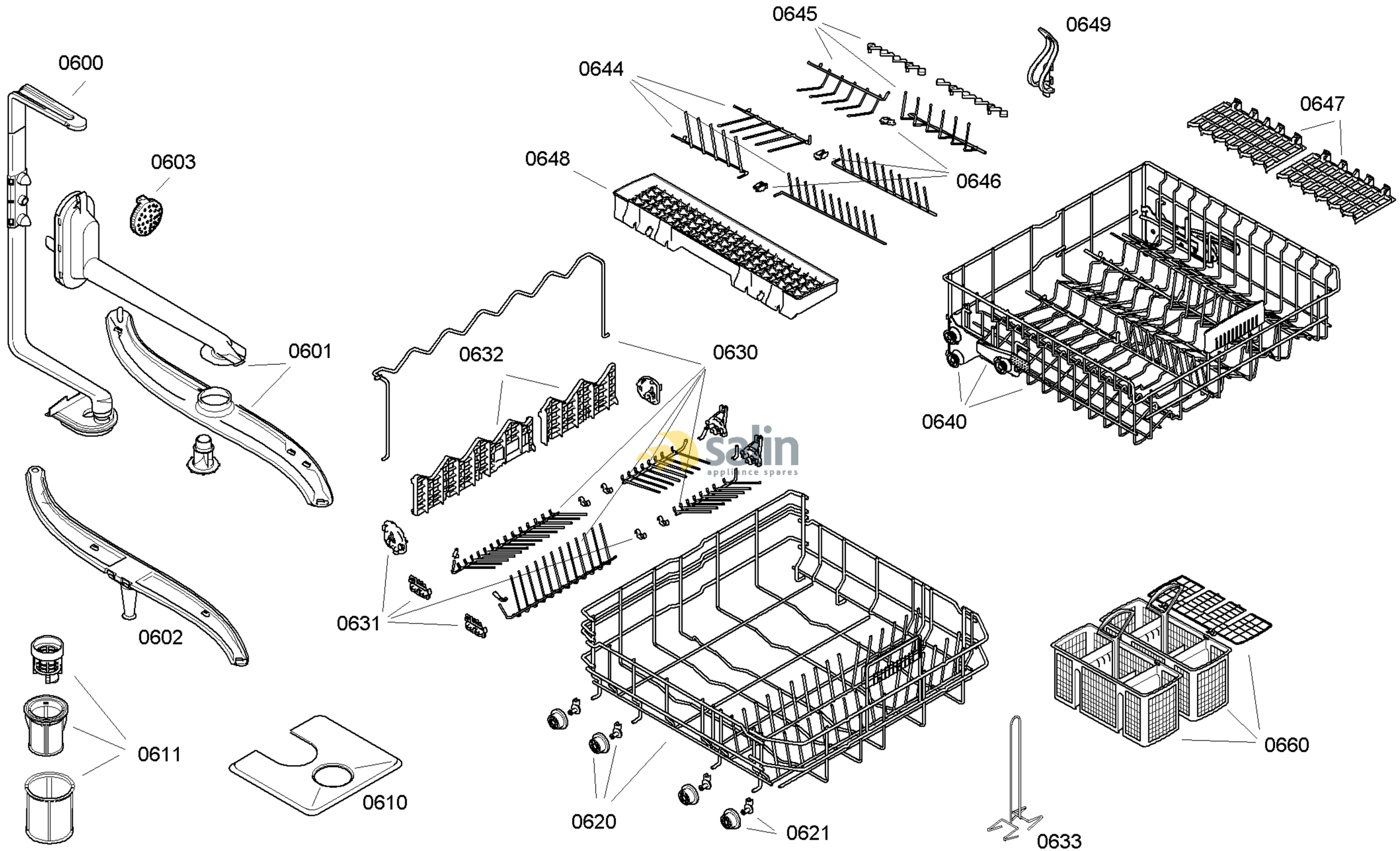


58300000135040 aet 000 a 6/6

FAMILY : SHV46M63EU
MODEL NO: SHV46M63EU/93
Check Position No/Part No or Replacement No